A.1 DESCRIPTION OF WHITE PHOSPHORUS ROCKETS

White phosphorus is an element that does not occur naturally. It is manufactured from naturally occurring phosphate rocks. White phosphorus is a colorless-to-white waxy solid with a garlic-like smell that ignites spontaneously in the air. White phosphorus burns at a temperature of 2,760 degrees Celsius (5,000 degrees Fahrenheit and 273 Kelvin). White phosphorus is used by the military in various types of ammunition to produce smoke for concealing troop movement and to identify targets. It is also used by industry to produce phosphoric acid and other chemicals for use in fertilizers, food additives, and cleaning compounds. Small amounts of white phosphorus were used in the past in pesticides and fireworks.

The 2.75-inch Wrap-Around Folding Fin Aircraft Rocket (see Figure A.1-1) utilizes a Mark 66 (MK 66) Mod 2 rocket motor that can be configured with a variety of projectiles or warheads. The rocket motor is 41.75 inches long without a warhead and weighs 13.6 pounds. The motor burns for 1.05 to 1.1 seconds and has a velocity at burnout of 2,425 feet per second (approximately 1,800 miles per hour [mph]). The WP warhead is designated M156. When fuzed, it is 16.02 inches long and weighs 9.7 pounds. It contains 2.2 pounds of white phosphorus and 0.125 pounds (2 ounces) of a high-explosive burster charge. The warhead can be configured with either an impact fuze or a proximity fuze. Impact fuzes initiate when they strike the ground or some other hard surface; proximity fuzes initiate at some given distance from the ground or the target. When the fuze detonates, it triggers the burster charge. This ruptures the warhead case and scatters phosphorus particles. The exposed phosphorus reacts (ignites) spontaneously when exposed to oxygen and produces the smoke cloud and the associated thermal signature.

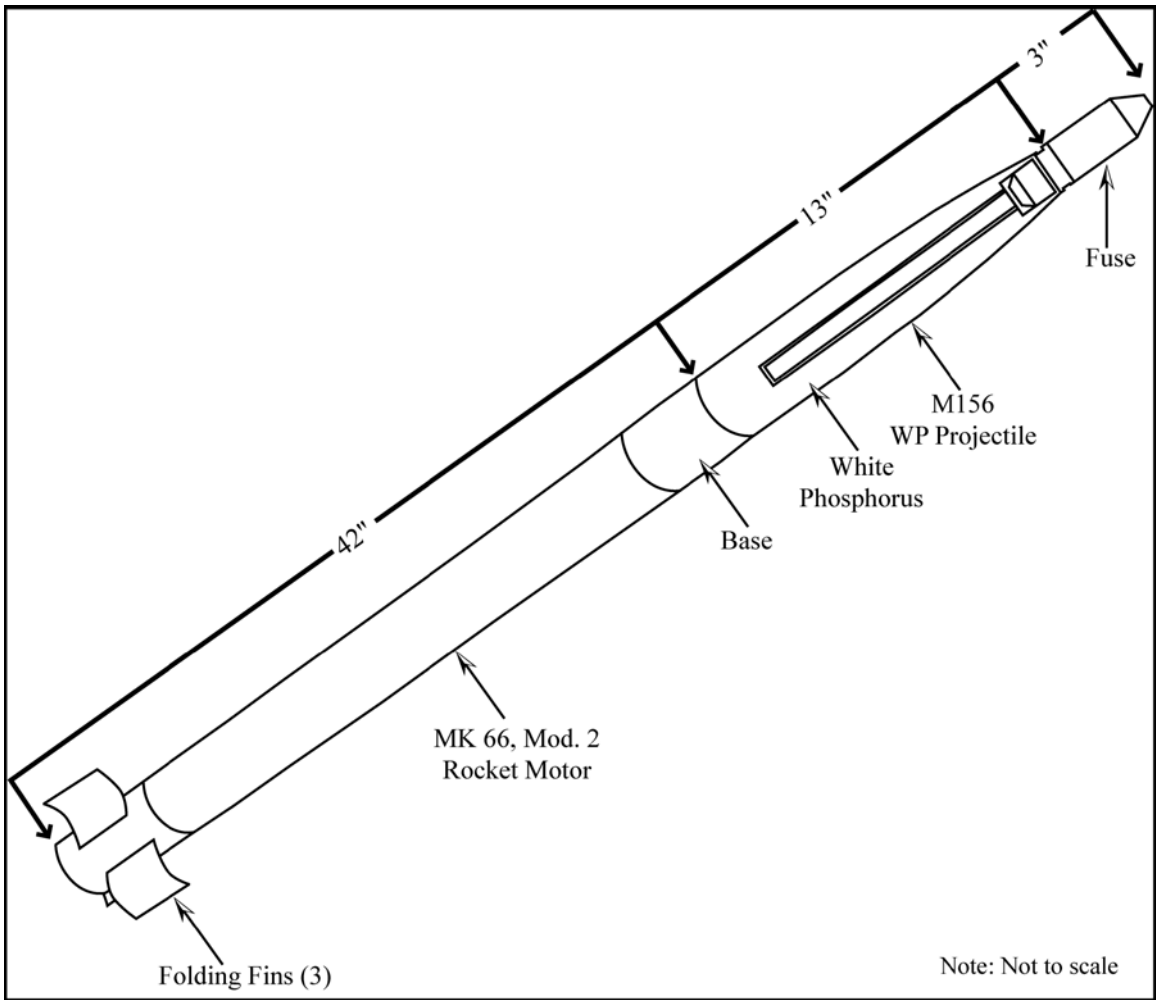

Figure A.1-1. Sketch of MK66, Mod. 2 Rocket Motor and M156 WP Warhead

A.2 CHARACTERISTICS OF CHAFF

Chaff is currently authorized for use in the existing airspace and, under the Proposed Action, training chaff would continue to be employed in the airspace. The chaff used during training consists of extremely small strands (or dipoles) of an aluminum-coated crystalline silica core. When released from an aircraft, chaff initially forms a sphere, then disperses in the air and eventually drifts to the ground. The chaff effectively reflects radar signals in various bands (depending on the length of the chaff fibers) and forms a very large image or electronic "cloud" of reflected signals on a radar screen. When obscured from radar detection by the cloud, the aircraft can safely maneuver or leave an area.

Chaff is made as small and light as possible so that it will remain in the air long enough to confuse enemy radar. The chaff fibers are approximately the thickness of a human hair (i.e., generally 25.4 microns in diameter), and range in length from 0.3 to over 1 inch. The weight of chaff material in the RR-170 or RR-188 shaft cartridge is approximately 95 grams or 3.35 ounces (Air Force 1997). Since chaff can obstruct radar, its use is coordinated with the Federal Aviation Administration (FAA). RR-188 training chaff would be used by A-10 aircraft for training in Special Use Airspace (SUA). RR-188 chaff has D- and E-band dipoles removed to avoid interference with FAA radar. RR-170 chaff dipoles are cut to disguise the aircraft and produce a more realistic training experience in threat avoidance. This chaff is the same size and the cartridge is the same as RR-188 chaff.

Chaff Composition

Chaff is comprised of silica, aluminum, and stearic acid, which are generally prevalent in the environment. Silica (silicon dioxide) belongs to the most common mineral group, silicate minerals. Silica is inert in the environment and does not present an environmental concern with respect to soil chemistry. Aluminum is the third most abundant element in the earth's crust, forming some of the most common minerals, such as feldspars, micas, and clays. Natural soil concentrations of aluminum ranging from 10,000 to 300,000 parts per million have been documented (Lindsay 1979). These levels vary, depending on numerous environmental factors, including climate, parent rock materials from which the soils were formed, vegetation, and soil moisture alkalinity/acidity. The solubility of aluminum is greater in acidic and highly alkaline soils than in neutral pH conditions. Aluminum eventually oxidizes to Al_2O_3 (aluminum oxide) over time, depending on its size and form and the environmental conditions.

The chaff fibers have an anti-clumping agent (Neofat, which is 90 percent stearic acid and 10 percent palmitic acid) to assist with rapid dispersal of the fibers during deployment (Air Force 1997). Stearic acid is an animal fat that degrades when exposed to light and air.

A single bundle of chaff consists of the filaments in an 8-inch-long rectangular tube or cartridge, a plastic piston, a cushioned spacer, and two plastic end caps (1/8-inch thick, 1-inch x 1-inch or 1-inch x 2-inch). The chaff dispenser remains in the aircraft. The plastic end caps and spacer fall to the ground when chaff is dispensed. The spacer is a spongy material (felt) designed to absorb

the force of release. Figure A.2-1 illustrates the components of a chaff cartridge. Table A.2-1 lists the components of the silica core and the aluminum coating. Table A.2-2 presents the characteristics of RR-188 or RR-170 chaff.

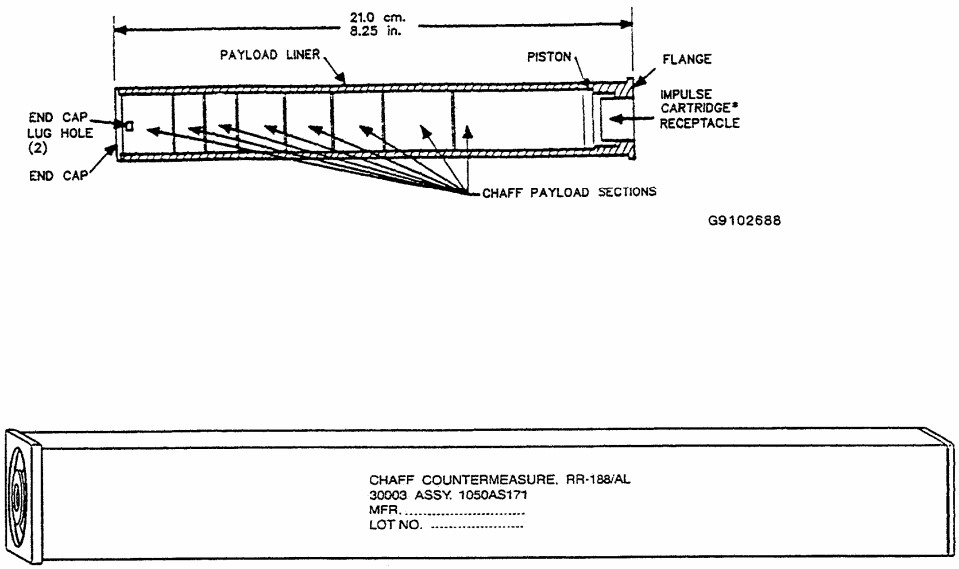

Figure A.2-1. RR-188 or RR-170 Chaff Cartridge

Table A.2-1. Components of RR-188 or RR-170 Chaff

Element	*Chemical Symbol*	*Percent (by weight)*
Silica Core		
Silicon dioxide	SiO_2	52-56
Alumina	Al_2O_3	12-16
Calcium Oxide and Magnesium Oxide	CaO and MgO	16-25
Boron Oxide	B_2O_3	8-13
Sodium Oxide and Potassium Oxide	Na_2O and K_2O	1-4
Iron Oxide	Fe_2O_3	1 or less
Aluminum Coating (Typically Alloy 1145)		
Aluminum	Al	99.45 minimum
Silicon and Iron	Si and Fe	0.55 maximum
Copper	Cu	0.05 maximum
Manganese	Mn	0.05 maximum
Magnesium	Mg	0.05 maximum
Zinc	Zn	0.05 maximum
Vanadium	V	0.05 maximum
Titanium	Ti	0.03 maximum
Others		0.03 maximum

Source: Air Force 1997

Table A.2-2. Characteristics of RR-188 or RR-170 Chaff

Attribute	*RR-188*
Aircraft	A-10
Composition	Aluminum coated silica
Ejection Mode	Pyrotechnic
Configuration	Rectangular tube cartridge
Size	8 x 1 x 1 inches (8 cubic inches)
Number of Dipoles	5.46 million
Dipole Size (cross-section)	1 mil (diameter)
Impulse Cartridge	BBU-35/B
Other Comments	Cartridge stays in aircraft; less interference with FAA radar (no D and E bands)

Source: Air Force 1997

Chaff Ejection

Chaff is ejected from aircraft pyrotechnically using a BBU-35/B impulse cartridge. Pyrotechnic ejection uses hot gases generated by an explosive impulse charge. The gases push the small piston down the chaff-filled tube. A small plastic end cap is ejected, followed by the chaff fibers. The plastic tube remains within the aircraft. Debris from the ejection consists of two small, square pieces of plastic 1/8-inch thick (i.e., the piston and the end cap), three mylar strips, and the felt spacer. Table A.2-3 lists the characteristics of BBU-35/B impulse cartridges used to pyrotechnically eject chaff.

Upon release from an aircraft, chaff forms a cloud approximately 30 meters in diameter in less than 1 second under normal conditions. Quality standards for chaff cartridges require that they demonstrate ejection of 98 percent of the chaff in undamaged condition, with a reliability of 95 percent at a 95 percent confidence level. They must also be able to withstand a variety of environmental conditions that might be encountered during storage, shipment, and operation.

Table A.2-4 lists performance requirements for chaff.

Table A.2-3. BBU-35/B Impulse Charges Used to Eject Chaff

Component	*BBU-35/B*
Overall Size Overall Volume Total Explosive Volume	0.625 inches x 0.530 inches 0.163 inches^3 0.034 inches^3
Bridgewire	Trophet A 0.0025 inches x 0.15 inches
Initiation Charge	0.008 cubic inches 130 mg 7,650 psi boron 20% potassium perchlorate 80% *
Booster Charge	0.008 cubic inches 105 mg 7030 psi boron 18% potassium nitrate 82%
Main Charge	0.017 cubic inches 250 mg loose fill RDX ** pellets 38.2% potassium perchlorate 30.5% boron 3.9% potassium nitrate 15.3% super floss 4.6% Viton A 7.6%

Source: Air Force 1997

Table A.2-4. Performance Requirements for Chaff

Condition	*Performance Requirement*	
High Temperature	Up to +165 degrees Fahrenheit (F)	
Low Temperature	Down to –65 °F	
Temperature Shock	Shock from –70 °F to +165 °F	
Temperature Altitude	Combined temperature altitude conditions up to 70,000 feet	
Humidity	Up to 95 percent relative humidity	
Sand and Dust	Sand and dust encountered in desert regions subject to high sand dust conditions and blowing sand and dust particles	
Accelerations/Axis	G-Level	Time (minute)
Transverse-Left (X)	9.0	1
Transverse-Right (-X)	3.0	1
Transverse (Z)	4.5	1
Transverse (-Z)	13.5	1
Lateral-Aft (-Y)	6.0	1
Lateral-Forward (Y)	6.0	1
Shock (Transmit)	Shock encountered during aircraft flight	
Vibration	Vibration encountered during aircraft flight	
Free Fall Drop	Shock encountered during unpackaged item drop	
Vibration (Repetitive)	Vibration encountered during rough handling of packaged item	
Three-Foot Drop	Shock encountered during rough handling of packaged item	

Note: Cartridge must be capable of total ejection of chaff from the cartridge liner under these conditions.
Source: Air Force 1997

Policies and Regulations on Chaff Use

Current Air Force policy on use of chaff and flares was established by the Airspace Subgroup of Headquarter Air Force Flight Standards Agency in 1993. It requires units to obtain frequency clearance from the Air Force Frequency Management Center and the FAA prior, to using chaff to ensure that training with chaff is conducted on a non-interference basis. This ensures electromagnetic compatibility between the FAA, the Federal Communications Commission, and Department of Defense (DoD) agencies. The Air Force does not place any restrictions on the use of chaff provided those conditions are met (Air Force 1997).

Air Force Instruction (AFI) 13-201, U.S. Air Force Airspace Management, September 2001. This guidance establishes practices to decrease disturbance from flight operations that might cause adverse public reaction. It emphasizes the Air Force's responsibility to ensure that the public is protected to the maximum extent practicable from hazards and effects associated with flight operations.

AFI 11-214 Aircrew and Weapons Director and Terminal Attack Controller Procedures for Air Operations, July 1994. This instruction delineates procedures for chaff and flare use. It prohibits use unless in an approved area.

References

Air Force. 1997. *Environmental Effects of Self-Protection Chaff and Flares*. Prepared for Headquarters Air Combat Command, Langley Air Force Base, Virginia.

_____. 1999. *Description of the Proposed Action and Alternatives (DOPAA) for the Expansion of the Use of Self-Protection Chaff and Flares at the Utah Test and Training Range, Hill Air Force Base, Utah*. Prepared for Headquarters Air Force Reserve Command Environmental Division, Robins AFB, Georgia.

Lindsay 1979.

A.3 CHARACTERISTICS AND ANALYSIS OF FLARES

Introduction

The Proposed Action would continue to employ M-206 and MJU-7 A/B self-protection flares in existing military training airspace over parts of Georgia, Florida, and offshore waters. Self-protection flares are magnesium pellets that, when ignited, burn for a short period of time (i.e., 3.5 to 5 seconds) at 2,000 degrees Fahrenheit (°F). The burn temperature is hotter than the exhaust of an aircraft, and therefore attracts and decoys heat-seeking weapons targeted on the aircraft. Flares are used in pilot training to develop the near instinctive reactions to a threat that are critical to combat survival. This appendix describes flare composition, ejection, risks and associated regulations.

Flare Composition

Self-protection flares are primarily mixtures of magnesium and Teflon (polytetrafluoroethylene) molded into rectangular shapes (Air Force 1997). Longitudinal grooves provide space for materials that aid in ignition such as:

- First fire materials: potassium perchlorate, boron powder, magnesium powder, barium chromate, Viton A, or Fluorel binder.
- Immediate fire materials: magnesium powder, Teflon, Viton A, or Fluorel
- Dip coat: magnesium powder, Teflon, Viton A or Fluorel

Typically, flares are wrapped with an aluminum-filament-reinforced tape (wrapping) and inserted into an aluminum (0.03 inches thick) case that is closed with a felt spacer and a small plastic end cap (Air Force 1997). The top of the case has a pyrotechnic impulse cartridge that is activated electrically to produce hot gases that push a piston, the flare material, and the end cap out of the aircraft into the airstream. Table A.3-1 provides a description of M-206 and MJU-7 A/B flare components. Typical flare composition and debris are summarized in Table A.3-2. Figure A.3-1 is an illustration of an M-206 flare, Figure A.3-2 an illustration of an MJU-7 A/B flare.

Table A.3-1. Description of M-206 and MJU-7 A/B Flares

Attribute	M-206	MJU-7 A/B
Aircraft	A-10, C-130, F-16	A-10, F-16
Mode	Parasitic	Semi-Parasitic
Configuration	Rectangle	Rectangle
Size	1 x 1 x 8 inches (8 cubic inches)	1 x 2 x 8 inches (16 cubic inches)
Impulse Cartridge	M-796	BBU-36/B; MJU-7 (T-1)/B Simulator uses M-796
Safe and Initiation Device	None	Slider Assembly
Weight (nominal)	6.8 oz	13 oz (T-1 type: 4.8 oz)
Comments	Simulator version (T-1) uses potassium chlorate, powdered sugar, and yellow dye smoke charge	Simulator version (T-1) uses potassium chlorate, powdered sugar, and yellow dye smoke charge

Table A.3-2. Typical Composition of M-206 and MJU-7 A/B Self-Protection Flares

Part	*Components*
Combustible	
Flare Pellet	Polytetrafluoroethylene (Teflon) (-[C_2F_4]$_n$ – n=20,000 units) Magnesium (Mg) Fluoroelastomer (Viton, Fluorel, Hytemp)
First Fire Mixture	Boron (B) Magnesium (Mg) Potassium perchlorate ($KClO_4$) Barium chromate ($BaCrO_4$) Fluoroelastomer
Immediate Fire/ Dip Coat	Polytetrafluoroethylene (Teflon) (-[C_2F_4]$_n$ – n=20,000 units) Magnesium (Mg) Fluoroelastomer
Assemblage (Residual Components)	
Aluminum Wrap	Mylar or filament tape bonded to aluminum tape
End Cap	Plastic (nylon)
Felt Spacers	Felt pads (0.25 inches by cross section of flare)
Safe & Initiation (S&I) Device (MJU-7 A/B only)	Plastic (nylon, tefzel, zytel)
Piston	Plastic (nylon, tefzel, zytel)

Source: Air Force 1997

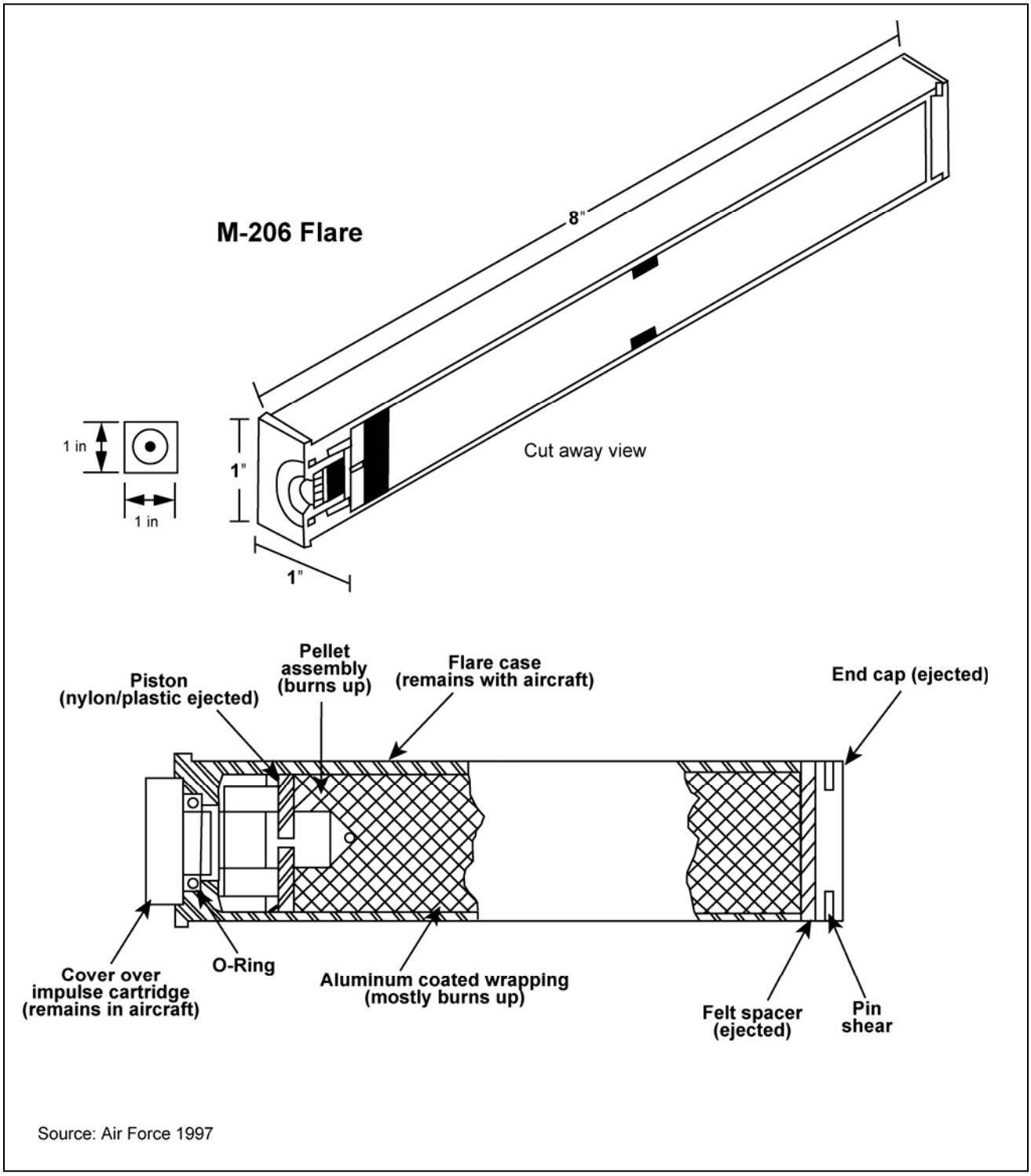

Figure A.3-1. M-206 Flare

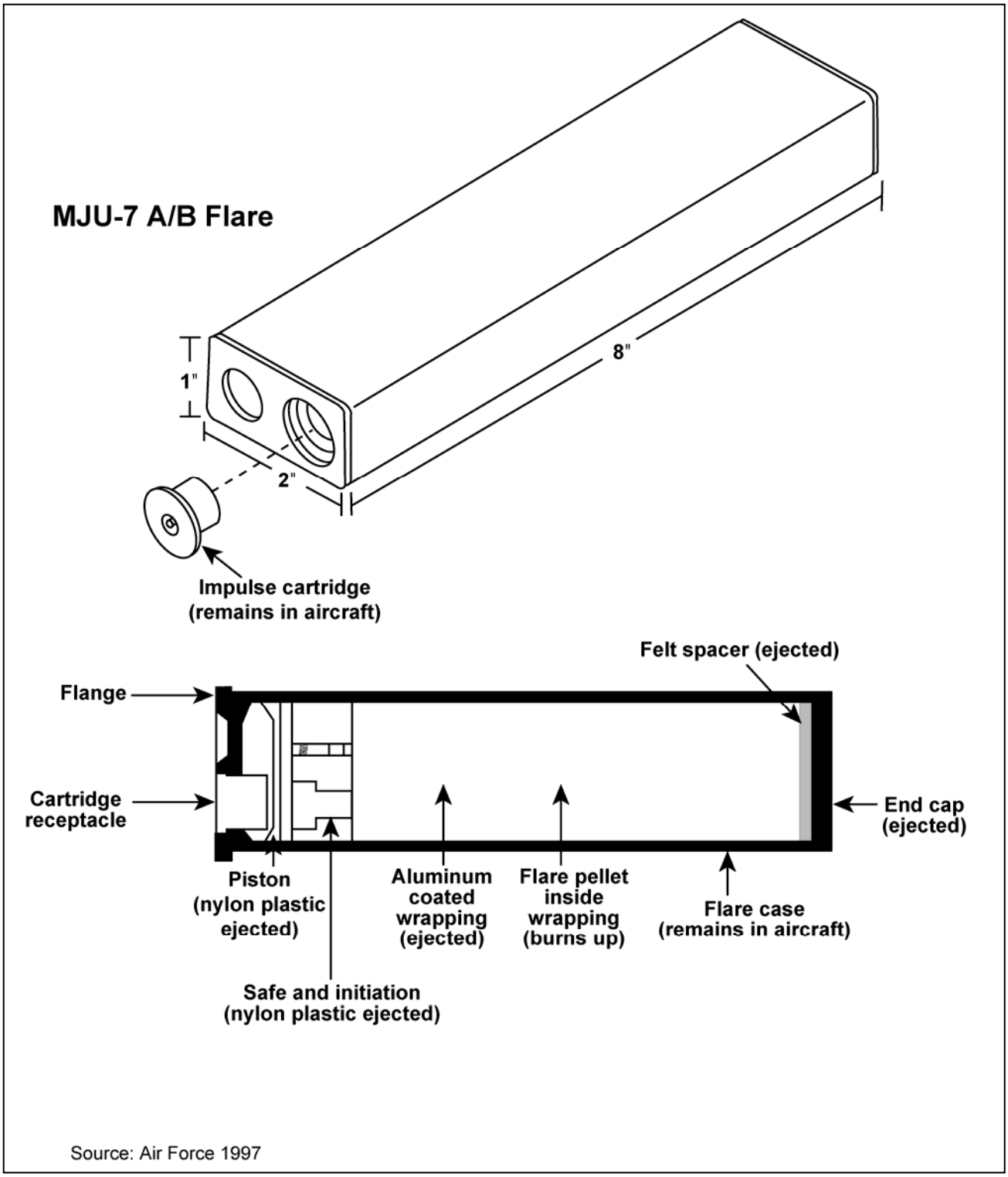

Figure A.3-2. MJU-7 A/B Flare

Flare Ejection

M-206 is a parasitic-type flare that uses an M-796 impulse cartridge (Air Force 1997). It is ignited in the aluminum case before it leaves the aircraft. Holes in the piston permit ignitor gases to contact the first fire mixture on top of the flare pellet.

The MJU-7 A/B is a semi-parasitic type flare that uses a BBU-36/B impulse cartridge. In this flare, a slider assembly incorporates an initiation pellet (640 mg of magnesium, Teflon, and Viton A or Fluorel binder). This pellet is ignited by the impulse cartridge, and hot gases reach the flare as the slider exits the case, exposing a fire passage from the initiation pellet to the first fire mixture on top of the flare pellet. Table A.3-3 describes the components of M-796 and BBU-36/B impulse charges.

Flares are tested to ensure they meet performance requirements in terms of ejection, ignition, and effective radiant intensity. If the number of failures exceeds the upper control quality assurance acceptance level (approximately 99 percent must be judged reliable for ejection, ignition, and intensity), the flares are returned to the manufacturer. Flare failure would occur if the flare failed to eject, did not burn properly, or failed to ignite upon ejection. For training use within the airspace, a dud flare would be one that successfully ejected but failed to ignite. That probability is projected to be 0.01 percent based upon dud flares located during military range cleanup.

Risks Associated with Flare Use

Risks associated with the use of flares fall within two main categories: the risk of fire from a flare and the risk of being struck by a residual flare component.

Fire Risk

Fire risk associated with flares stems from an unlikely, but possible scenario that results in the flare reaching the ground or vegetation while still burning. The altitude from which flares are dropped is strictly regulated by the airspace manager, and is based on a number of factors including flare burn-out rate. The flare burn-out rate is shown in Table A.3-4. Defensive flares typically burn out in 3.5 to 5 seconds, during which time the flare will have fallen between 200 and 400 feet. Specific defensive flare burn-out rates are classified. Table A.3-4 is based on conditions that assume zero aerodynamic drag and a constant acceleration rate of 32.2 feet per second per second.

$$D = (V_o * T) + (0.5 * (A * T^2))$$

Where:

D = Distance
Vo = Initial Velocity = 0
T = Time (in Seconds)
A = Acceleration

Table A.3-3. Components of M-796 and BBU-36/B Impulse Charges

Component	*M-796*	*BBU-36/B*
Overall Size Overall Volume Total Explosive Volume	0.449 x 0.530 inches 0.104 cubic inches 0.033 cubic inches	0.740 x 0.550 inches 0.236 cubic inches 0.081 cubic inches
Bridgewire	Trophet A 0.0025 inches (diameter)	Trophet A
Closure Disk	Scribed disc, washer	Scribed disc, washer
Initiation Charge		
Volume Weight Compaction Composition	0.011 cubic inches 100 mg 5,500 psi 20% boron 80% calcium chromate	0.01 cubic inches 100 mg 6,200 psi 42.5% boron 52.5 % potassium perchlorate 5.0% Viton A
Booster Charge		
Volume Weight Compaction Composition	0.011 cubic inches 70 mg 5,500 psi 18% boron 82% potassium nitrate	0.01 cubic inches 150 mg 5,100 psi 20% boron 80% potassium nitrate
Main Charge		
Volume Weight Compaction Composition	0.011 cubic inches 185 mg Loose fill Hercules HPC-1 (~40% nitrocellulose)	0.061 cubic inches 655 mg Loose fill Hercules #2400 smokeless powder (50-77% nitrocellulose, 15-43% nitroglycerine)

Source: Air Force 1997

Table A.3-4. Flare Burn-out Rates

Time (in Sec)	*Acceleration*	*Distance (in feet)*
0.5	32.2	4.025
1.0	32.2	16.100
1.5	32.2	36.225
2.0	32.2	64.400
2.5	32.2	100.625
3.0	32.2	144.900
3.5	32.2	197.225
4.0	32.2	257.600
4.5	32.2	326.025
5.0	32.2	402.500
5.5	32.2	487.025
6.0	32.2	579.600
6.5	32.2	680.225
7.0	32.2	788.900
7.5	32.2	905.625
8.0	32.2	1030.400
8.5	32.2	1163.225
9.0	32.2	1304.100
9.5	32.2	1453.025
10.0	32.2	1610.000

Note: Initial velocity is assumed to be zero.

Flare Strike Risk

Residual flare materials are those that are not completely consumed during ignition and fall to the ground, creating the risk of striking a person or property. For the M-206 flare, residual materials consist of a plastic end cap, a piston, one or two felt spacers, and a piece of aluminum coated wrapper (Table A.3-5). Residual material from the MJU-7 A/B consists of an end cap, an initiation assembly (safe and initiation device), a piston, one or two felt spacers, and an aluminum coated wrapper (Table A.3-5). For both flare types, the wrapper may be partially consumed during ignition, so the wrapping residual material could range in size from the smallest size, 1 inch by 1 inch, to the largest size, 3 inches by 13 inches. The size of the residual wrapping material would depend upon the amount of combustion that occurred as the flare was deployed.

Table A.3-5. Residual Material from M-206 and MJU-7 A/B Flares

Component	*Weight*
M-206	
Plastic end cap	0.0061 pounds
Piston and cushion assembly	0.0043 pounds
Felt spacer	0.0013 pounds
Wrapper (2 inches x 13 inches)	0.0215 pounds
MJU-7 A/B	
End cap	0.0072 pounds
Safe & Initiation (S&I) device	0.0453 pounds
Piston	0.0072 pounds
Felt spacer	0.0011 pounds
Wrapper (3 inches x 13 inches)	0.0322 pounds

After ignition, as described in section 3.0, residual components of the M-206 flare and most residual components of the MJU-7 A/B flare have high surface to mass ratios and are not judged capable of damage or injury when they impact the surface. One component of the MJU-7 A/B flare, referred to as the Safe and Initiation (S&I) device, has a weight of approximately 0.725 ounces (0.0453 pounds). It is sized and shaped such that it is capable of achieving a terminal velocity that could cause injury if it struck a person. This section calculates the likelihoods of such an S&I device striking a person, a private structure, or a vehicle under either the Moody 1 or 3 MOAs or the Live Oak MOA. No evaluation was conducted for the areas beneath the Restricted Airspaces (R-3007, R-3008) and the Warning Area (W-158) because no individuals or structures are expected in these areas.

Technical Approach

Moody AFB aircraft training flights are distributed randomly and uniformly within the Moody and Live Oak MOAs. Avoidance areas that are designated for low altitude flight need not be avoided for higher altitude flight. Flare component release altitudes and angles of release are sufficiently random that ground impact locations of flare materials are also assumed to be uniformly distributed under the MOAs.

For any particular residual component of a released flare, the conditional probability that it strikes a particular object is equal to the ratio of the object area to the total area of the MOA. For multiple objects (i.e. people, structures, vehicles), the probability of striking any one object is the ratio of the sum of object areas to the MOA. The frequency of a residual component striking one of many objects is the frequency of releasing residual components times the conditional probability of striking one of the many objects per given release.

In equation form, this relationship is:

$$Strike\ frequency = component\ drop\ frequency\ in\ MOA \times \frac{area\ of\ object \times number\ of\ objects\ in\ MOA}{MOA(area)}$$

The potential consequences of a residual component with high velocity and momentum striking particular objects are postulated as follows:

- Striking the head of an unprotected individual: possible concussion
- Striking the body of an unprotected individual: possible injury
- Striking a private structure: possible damage
- Striking a private vehicle: possible damage (potential injury if vehicle moving)

The frequencies of each of these consequences are estimated for the two MOAs.

Risk/Frequency Estimation

The frequency of each of the strike consequences is computed as the product of the frequency of releasing residual components with high momentum and the conditional probability of striking people, structures, or vehicles. These estimates are developed in the following paragraphs.

Frequency and Momentum of Released Residual MJU-7 A/B Components

Projections indicate approximately 6,800 MJU-7 A/B flares per year would be deployed within the Moody 1 MOA, 800 MJU-7 A/B flares per year deployed within Moody 3 MOA, and 400 MJU-7 A/B flares per year deployed within the Live Oak MOA.

The effect of the impact of a residual MJU-7 A/B component from Table A.3-6 is judged by computing the component's terminal velocity and momentum.

Terminal velocity (V_T) is calculated by the equation:

$$V_T = \left[\frac{2}{\rho}\left(\frac{W}{A \times C_d}\right)\right]^{0.5} = 29 \times \left(\frac{W}{A}\right)^{0.5}$$

Where: V_T = Terminal Velocity (in Feet/Second)
ρ = Nominal Air Density (2.378×10^{-3} lbs-sec^2/ft^4)
W = Weight (in Pounds)
A = Surface Area Facing the Air stream (in ft^2)
C_d = Drag Coefficient = 1.0

Drag coefficients are approximately 1.0 over a wide range of velocities and Reynolds numbers (Re) for irregular objects (e.g. non-spherical). Using this drag coefficient, the computed terminal velocities (Table A.3-7) produce Re values within this range (Re < 2×10^5), which justifies the use of the drag coefficient.

Table A.3-6. MJU-7 A/B Flare Major Component Properties

Component	*Geometry*	*Dimensions (inches)*	*Weight (Pounds)*
S&I device	Rectangular solid	2 × 0.825 × 0.5	0.0453
Piston	Rectangular open	2 × 0.825 × 0.5	0.0072
End Caps	Rectangular plate	1 × 2 × 0.125	0.0072

Table A.3-7. MJU-7 A/B Flare Component Hazard Assessment

	MAXIMUM SURFACE AREA			MINIMUM SURFACE AREA		
Component	*Area (in^2)*	*Terminal Velocity (ft/sec)*	*Momentum (lb-sec)*	*Area (in^2)*	*Terminal Velocity (ft/sec)*	*Momentum (lb-sec)*
S&I device	1.65	58	0.08	0.413	115	0.16
Piston	1.65	23	0.005	0.413	46	0.01
End Caps	2.0	21	0.005	0.125	84	0.02

The weights and geometries of major flare components are approximately as listed in Table A.3-6.

Terminal velocity momentums of these components are computed based on maximum (two square inches) and minimum (one square inch) areas and are listed in Table A.3-7. Actual values would be between these extremes. The momentum values are the product of mass (in slugs) and velocity. A slug is defined as the mass that, when acted upon by a 1-pound force, is given an acceleration of 1.0 ft/sec^2.

The focus of this analysis will be the S&I device. Other flare components are not calculated to achieve a momentum that could cause damage.

Estimated Areas of People, Structures, and Vehicles

People at risk of being struck by a dropped flare component are assumed to be standing outdoors under a MOA (people in structures or vehicles are assumed protected). The dimensions of an average person are assumed to be 5 foot 6 inches high by 2 feet wide by 1 foot deep (men 5 foot 10 inches; women 5 foot 4 inches; children varied). The S&I device is expected to strike ground objects at an angle of 80° or greater to the ground, assuming 80° to the ground allows for possible wind or other drift effects. With the flare component falling at 80° to the ground, a person's body (5.5 × 2 × 1 feet) projects an area of 3.9 ft^2 normal to the path of the dropped component.

The number of people within each MOA is estimated based on census data. Within the Moody 1 MOA, overall population density is 49.1 persons/mi^2, Moody 3 MOA overall population density is 18.9 persons/mi^2, and within the Live Oak MOA complex it is 41.1 persons/mi^2 (U.S. Bureau of the Census 2000). For this assessment, it is assumed that a person would be outdoors and unprotected 10 percent of the time (Tennessee Valley Authority 2003; Klepeis et al. 2001).

Structure and vehicle densities are estimated from 2000 census data. Based on Bureau of the Census data, average family size in the areas underlying both the Moody and Live Oak MOA complexes is 2.65 persons (U.S. Bureau of the Census 2000). This equates to approximately 18.5, 7.1 and 15 families/mi² under the Moody 1, 3, and Live Oak MOA complexes, respectively. As a conservative estimate, it is assumed that each family could have or otherwise use the equivalent of two structures associated with their property and own two vehicles. Thus, it was assumed that there would be 37, 14 and 30 structures/mi² and 37, 14 and 30 vehicles/mi² on the Moody 1, 3 and Live Oak MOAs, respectively. The average area of each of the two structures on each property under a MOA is estimated to be 1500 ft² and the average area of each of the two vehicles per family is estimated to be 100 ft².

Potential Personnel Injuries

The frequencies of the identified consequence categories can be computed based on the methodology discussed in Section 4.2.1 and the data and assumptions discussed above. Flight maneuvers to deploy flares are assumed to be randomly distributed throughout the training airspace.

A personnel injury could occur if an S&I device struck an unprotected person. The frequency of striking a person is:

$$Injury\ \ frequency = comp\,drop\ \ freq \times \frac{body\,area \times pop.density \times Fract\,unprot \times MOA(area)}{MOA(area)}$$

For the Moody 1 MOA:

$$Moody1\,injury\ \ frequency = 6800/year \times 3.9\ ft^2/pers \times 49.1\,pers/mi^2 \times 0.1 \times 1.71 \times 10^{-11}\ mi^2/ft^2$$
$$= 0.000002 \text{ injuries/year}$$

For the Moody 3 MOA:

$$Moody3\,injury\ \ frequency = 800/year \times 3.9\ ft^2/pers \times 18.9\,pers/mi^2 \times 0.1 \times 3.6 \times 10^{-10}\ mi^2/ft^2$$
$$= 0.000002 \text{ injuries/year}$$

For the Live Oak MOA:

$$LiveOak\,injury\ \ frequency = 400/year \times 3.9\ ft^2/pers \times 41.1\,pers/mi^2 \times 0.1 \times 2.6 \times 10^{-10}\ mi^2/ft^2$$
$$= 0.000001 \text{ injuries/year}$$

The maximum momentum of the S&I device would vary between 0.08 and 0.16 pound-seconds depending upon orientation. In this momentum range, an injury is postulated that could be equivalent to a bruise from a large hailstone. Approximately 20 percent of any strikes could be to the head. A potentially more serious injury could be expected if the head were struck.

As a basis of comparison, laboratory experimentation in accident pathology indicates that there is a 90 percent probability that brain concussions would result from an impulse of 0.70 pound-seconds to the head, and less than a 1 percent probability from impulses less than 0.10 pound-seconds (Air Force 1997). The only MJU-7 A/B component with momentum values near 0.10 pound-seconds is the S&I device with a momentum between 0.08 and 0.16 pound-seconds. A

strike of an S&I device to the head has approximately a 1 percent probability of causing a concussion.

Structure Impact

The expected annual number of S&I devices striking structures is calculated to be:

$$Sructure\ strike\ frequency = comp\ drop\ freq \times \frac{struct.area \times struct.density \times MOA(area)}{MOA(area)}$$

For the Moody 1 MOA:

$$Moody1\ injury\ frequency = 6800/year \times 1500\ ft^2/struct \times 37 struct/mi^2 \times 1.71 \times 10^{-11}\ mi^2/ft^2$$

= less than 1 impacted structure/year

For the Moody 3 MOA:

$$Moody3\ injury\ frequency = 800/year \times 1500\ ft^2/struct \times 14 struct/mi^2 \times 3.6 \times 10^{-10}\ mi^2/ft^2$$

= less than 1 impacted structure/year

For the Live Oak MOA:

$$LiveOak strike\ frequency = 400/year \times 1500\ ft^2/struct \times 30\ struct/mi^2 \times 2.6 \times 10^{-10}\ mi^2/ft^2$$

= less than 1 impacted structure/year

The maximum momentum of the S&I device would vary between 0.08 and 0.16 pound-seconds depending upon orientation. This would be comparable to a large hailstone and would not be expected to damage a structure.

Vehicle Impact

The expected annual number of S&I devices striking a vehicle is calculated to be:

$$Vehicle\ strike\ frequency = comp\ drop\ freq \times \frac{veh.area \times veh.density \times MOA(area)}{MOA(area)}$$

For the Moody 1 MOA:

$$Moody1\ strike\ frequency = 6800/year \times 100\ ft^2/veh \times 37\ veh/mi^2 \times 3.71 \times 10^{-11}\ mi^2/ft^2$$

= less than 0.001 impacted vehicle/year

For the Moody 3 MOA:

$$Moody3\ strike\ frequency = 800/year \times 100\ ft^2/veh \times 14\ veh/mi^2 \times 3.6 \times 10^{-10}\ mi^2/ft^2$$

= less than 0.001 impacted vehicle/year

For the Live Oak MOA:

$$LiveOak\ strike\ frequency = 400/year \times 100\ ft^2/veh \times 30\ veh/mi^2 \times 2.6 \times 10^{-10}\ mi^2/ft^2$$

= less than 0.001 impacted vehicle/year

The S&I device maximum momentum would vary between 0.08 and 0.16 pound-seconds depending upon orientation. A strike to a vehicle could cause a cosmetic dent similar to a

hailstone impact. Although not numerically estimated, a strike to a moving vehicle could result in a vehicle accident.

Summary

The risk assessment described in this section was performed to estimate the likelihood of MJU-7 A/B flare components striking an unprotected person or property. The assessment assumed rates of usage of the MJU-7 A/B flares consistent with the estimated use of flares in Moody 1, 3 and Live Oak MOAs for this action. The results of the assessment are summarized in Table A.3-8.

Table A.3-8. Likelihood of MJU-7 A/B Component Strike

Consequence Type	*Expected Value Moody 1 MOA (events/year)*	*Expected Value Moody 3 MOA (events/year)*	*Expected Value Live Oak MOA (events/year)*
Personnel Injuries	0.000002	0.000002	0.000001
Private Structures Struck	less than 0.006	less than 0.006	less than 0.005
Private Vehicles Struck	less than 0.001	less than 0.001	less than 0.001

The expected value or expected frequency presented in Table A.3-8 is based upon the same mathematics that occur when a coin is flipped. The expected frequency of tails in 10 coin flips/year is 10 flips/year x 0.5 probability of tails per coin flip = 5 expected tails/year.

The conditional probability of one dropped flare component striking an object or a body is included in the Table A.3-8 calculation. The product of this probability and the drop frequency, 6800/year, gives the expected value of 0.005 body strikes/year. All the expected strike values take into consideration the number of people, area under the airspace, and the number of MJU-7 A/B flares proposed to be used. The 0.005 number is the calculated potential to strike an unprotected person in Moody 1 MOA. This is analogous to the estimated less than 1 private structure and slightly fewer than 1.0 vehicle per year under the Moody 1 MOA. Since the head represents approximately 20 percent of a person's exposed surface area, and approximately 1 percent of head impacts could result in a concussion, the expected frequency of a concussion under either the Moody 1, 3 or Live Oak MOAs is approximately 1 in 100,000 years.

These estimated expected values have been computed as nominal values; they are not statistically biased in either a conservative or non-conservative direction. These risk values are computed to support Air Force evaluations of the risks of using MJU-7 A/B flares in the Moody 1 ,3 and Live Oak MOAs.

Policies and Regulations Addressing Flare Use

Air Force policy on flare use was established by the Airspace Subgroup of Headquarters (HQ) Air Force Flight Standards Agency (AFFSA) in 1993 (Memorandum from John R. Williams, 28 June 1993) (Air Force 1997). This policy permits flare drops over military-owned or controlled land and in Warning Areas. Chaff and flares use in the Moody and Live Oak Military Operations Areas (MOAs) was analyzed in the previous EAs. Flare drops are permitted in MOAs and Military Training Routes (MTRs) only when an environmental analysis has been

completed. Minimum altitudes must be adhered to. Flare drops must also comply with established written range regulations and procedures.

AFI 11-214 prohibits using flare systems except in approved areas with intent to dispense, and sets certain conditions for employment of flares. Flares are authorized over government-owned and controlled property and over-water Warning Areas with no minimum altitude restrictions when there is no fire hazard. If a fire hazard exists, minimum altitudes will be maintained in accordance with the applicable directive or range order. An ACC supplement to AFI 11-214 (15 October 2003) prescribes a minimum flare employment altitude of 2,000 feet AGL over non-government owned or controlled property (Air Force 1997).

References

Klepeis, Neil E., William C. Nelson, Wayne R. Ott, John P. Robinson, Andy M. Tsang, Paul Switzer, Joeseph V. Behar, Stephen C. Hern, and William H. Engelmann. The National Human Activity Pattern Survey (NHAPS) a resource for assessing exposure to environmental pollutants. http://exposurescience.org/research.shtml#NHAPS.

Tennessee Valley Authority. 2003. On the Air, Technical Notes on Important Air Quality Issues, Outdoor Ozone Monitors Over-Estimate Actual Human Ozone Exposure. http://www.tva.gov/environment/air/ontheair/pdf/outdoor.pdf.

United States Air Force (Air Force). 1997. Environmental Effects of Self Protection Chaff and Flares. Final Report. August.

United States Bureau of the Census. 2000. Table DP-1 Profile of General Demographic Characteristics. Census 2000 SF-1. Available on-line at http://factfinder.census.gov.

APPENDIX B

PUBLIC AND AGENCY CORRESPONDENCE

THIS PAGE INTENTIONALLY LEFT BLANK.

DEPARTMENT OF THE AIR FORCE
HEADQUARTERS AIR COMBAT COMMAND
LANGLEY AIR FORCE BASE, VIRGINIA

MEMORANDUM FOR: U.S. Fish and Wildlife Service
Brunswick Field Office
Robert Brooks
4270 Norwich St.
Brunswick, GA 31520

FROM: HQ ACC/A7ZP
129 Andrews St., Suite 102
Langley AFB VA 23665-2969

SUBJECT: Base Realignment and Closure (BRAC) Environmental Assessment Moody Air Force Base (AFB), Georgia

1. The United States Air Force (Air Force) is in the process of preparing an Environmental Assessment (EA) to assess the potential environmental consequences of the Base Realignment and Closure (BRAC) commission recommendations at Moody AFB, GA that became law on November 9th, 2005 in accordance with the Defense Base Closure and Realignment Act of 1990 (Public Law 101-510).

2. The recommendations for Moody AFB consist of several elements: a total of 113 T-38C and T-6A trainer aircraft would be removed from Moody AFB and returned to Air Force inventory and 48 A/OA-10 aircraft from Eielson AFB, Alaska and Pope AFB, North Carolina would be relocated to Moody AFB; Moody AFB would receive base-level TF34 engine intermediate maintenance, establishing a TF34 Centralized Intermediate Repair Facility (CIRF); and the base-level ALQ-184 intermediate maintenance would be relocated from Moody AFB to an alternate location.

3. These elements would result in a net increase of approximately 760 military and civilian personnel and 37 construction projects at Moody AFB, also including lighting, radar and scoring system improvements at Grand Bay Range. The A-10s would need to utilize existing airspace and the Grand Bay and Townsend training ranges for flight and munitions training. This training would include the continued deployment of defensive countermeasures in the existing airspace and training ordnance on both Grand Bay and Townsend training ranges. Training at both locations would also include the use of white phosphorous rockets and inert heavyweight bombs. Attachment 1 is a map that depicts the locations of the airspace and training ranges to be utilized as a result of this beddown.

4. Pursuant to analysis of the proposed beddown and to support compliance with the Endangered Species Act, we would request information regarding federally listed threatened, endangered, candidate, and proposed to be listed species that occur or may occur in the potentially affected area. Please send this information to our representative at SAIC Attn: Mike Nunley, 1140 Eglin Parkway, Shalimar, FL 32579. We would appreciate your identifying a point of contact for any follow-up questions we may have. Please provide any preliminary agency comments or information regarding the proposed

beddown not later than July 8th, 2006 in order to be incorporated into the preparation of the draft EA.

Please contact the EA Project Manager, Mr. Ken Walker, at the above address or at (757) 764-9339 with any questions or concerns that you or your staff may have. Thank you for your assistance in this matter.

LARRY H. DRYDEN, P.E.
Chief, Planning Branch

Attachment:
Map of Potentially Affected Areas and Airspace

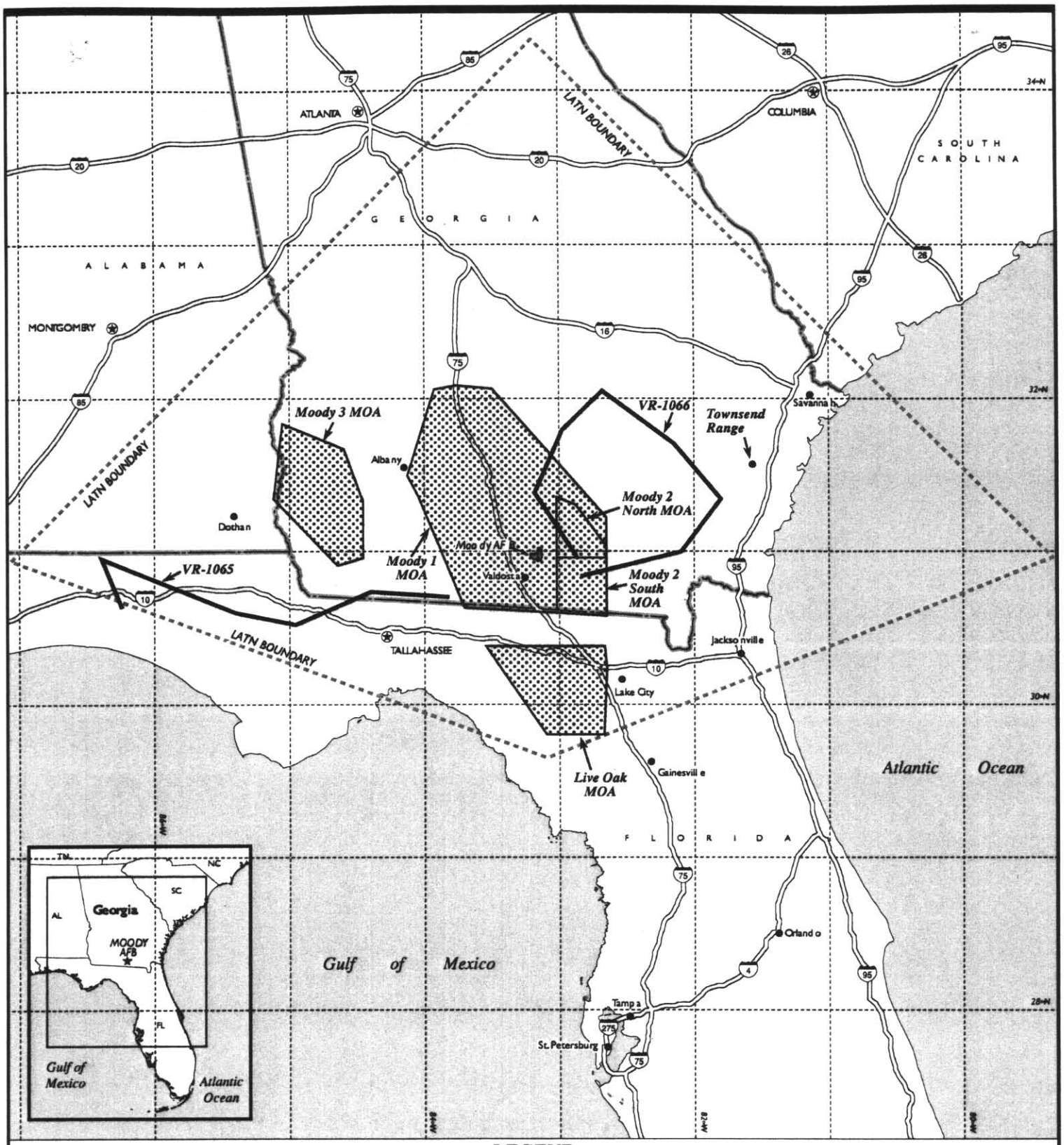

LEGEND

- Low Altitude Tactical Navigation (LATN) Boundary
- Military Operations Area (MOA)
- Military Training Route

Statute Miles 0 55
Nautical Miles 0 55

G06-0061

DEPARTMENT OF THE AIR FORCE
HEADQUARTERS AIR COMBAT COMMAND
LANGLEY AIR FORCE BASE, VIRGINIA

MEMORANDUM FOR: Alabama Department of Environmental Management
Scott Demick
PO Box 301463
Montgomery, AL 36130-1463

FROM: HQ ACC/A7ZP
129 Andrews St., Suite 102
Langley AFB VA 23665-2969

SUBJECT: Base Realignment and Closure (BRAC) Environmental Assessment Moody Air Force Base (AFB), Georgia

1. The United States Air Force (Air Force) is in the process of preparing an Environmental Assessment (EA) to assess the potential environmental consequences of the Base Realignment and Closure (BRAC) commission recommendations at Moody AFB, GA that became law on November 9th, 2005 in accordance with the Defense Base Closure and Realignment Act of 1990 (Public Law 101-510).

2. The recommendations for Moody AFB consist of several elements: a total of 113 T-38C and T-6A trainer aircraft would be removed from Moody AFB and returned to Air Force inventory and 48 A/OA-10 aircraft from Eielson AFB, Alaska and Pope AFB, North Carolina would be relocated to Moody AFB; Moody AFB would receive base-level TF34 engine intermediate maintenance, establishing a TF34 Centralized Intermediate Repair Facility (CIRF); and the base-level ALQ-184 intermediate maintenance would be relocated from Moody AFB to an alternate location.

3. These elements would result in a net increase of approximately 760 military and civilian personnel and 37 construction projects at Moody AFB, also including lighting, radar and scoring system improvements at Grand Bay Range. The A-10s would need to utilize existing airspace and the Grand Bay and Townsend training ranges for flight and munitions training. This training would include the continued deployment of defensive countermeasures in the existing airspace and training ordnance on both Grand Bay and Townsend training ranges. Training at both locations would also include the use of white phosphorous rockets and inert heavyweight bombs. Attachment 1 is a map that depicts the locations of the airspace and training ranges to be utilized as a result of this beddown.

3. We request your assistance in identifying potential areas of environmental impact to be addressed in the EA. If you have any specific items of interest about the proposal, we would like to hear from you. Though we will consider comments received at any time during the environmental process, please notify us of any concerns by July 8th, 2006 in order to be incorporated into the preparation of the draft EA.

Please contact the EA Project Manager, Mr. Ken Walker, at the above address or at (757) 764-9339 with any questions or concerns that you or your staff may have. Thank you for your assistance in this matter.

LARRY H. DRYDEN, P.E.
Chief, Planning Branch

Attachment:
Map of Potentially Affected Areas and Airspace

DEPARTMENT OF THE AIR FORCE
HEADQUARTERS AIR COMBAT COMMAND
LANGLEY AIR FORCE BASE, VIRGINIA

MEMORANDUM FOR: U.S. Fish and Wildlife Service
Elaine Snyder-Conn
1208 B Main St.
Daphne, AL 36526

FROM: HQ ACC/A7ZP
129 Andrews St., Suite 102
Langley AFB VA 23665-2969

SUBJECT: Base Realignment and Closure (BRAC) Environmental Assessment Moody Air Force Base (AFB), Georgia

1. The United States Air Force (Air Force) is in the process of preparing an Environmental Assessment (EA) to assess the potential environmental consequences of the Base Realignment and Closure (BRAC) commission recommendations at Moody AFB, GA that became law on November 9th, 2005 in accordance with the Defense Base Closure and Realignment Act of 1990 (Public Law 101-510).

2. The recommendations for Moody AFB consist of several elements: a total of 113 T-38C and T-6A trainer aircraft would be removed from Moody AFB and returned to Air Force inventory and 48 A/OA-10 aircraft from Eielson AFB, Alaska and Pope AFB, North Carolina would be relocated to Moody AFB; Moody AFB would receive base-level TF34 engine intermediate maintenance, establishing a TF34 Centralized Intermediate Repair Facility (CIRF); and the base-level ALQ-184 intermediate maintenance would be relocated from Moody AFB to an alternate location.

3. These elements would result in a net increase of approximately 760 military and civilian personnel and 37 construction projects at Moody AFB, also including lighting, radar and scoring system improvements at Grand Bay Range. The A-10s would need to utilize existing airspace and the Grand Bay and Townsend training ranges for flight and munitions training. This training would include the continued deployment of defensive countermeasures in the existing airspace and training ordnance on both Grand Bay and Townsend training ranges. Training at both locations would also include the use of white phosphorous rockets and inert heavyweight bombs. Attachment 1 is a map that depicts the locations of the airspace and training ranges to be utilized as a result of this beddown.

4. Pursuant to analysis of the proposed beddown and to support compliance with the Endangered Species Act, we would request information regarding federally listed threatened, endangered, candidate, and proposed to be listed species that occur or may occur in the potentially affected area. Please send this information to our representative at SAIC Attn: Mike Nunley, 1140 Eglin Parkway, Shalimar, FL 32579. We would appreciate your identifying a point of contact for any follow-up questions we may have. Please provide any preliminary agency comments or information regarding the proposed

beddown not later than July 8th, 2006 in order to be incorporated into the preparation of the draft EA.

Please contact the EA Project Manager, Mr. Ken Walker, at the above address or at (757) 764-9339 with any questions or concerns that you or your staff may have. Thank you for your assistance in this matter.

LARRY H. DRYDEN, P.E.
Chief, Planning Branch

Attachment:
Map of Potentially Affected Areas and Airspace

DEPARTMENT OF THE AIR FORCE
HEADQUARTERS AIR COMBAT COMMAND
LANGLEY AIR FORCE BASE, VIRGINIA

MEMORANDUM FOR: U.S. Fish and Wildlife Service
Stan Simpkins
1612 June Ave.
Panama City, FL 32405

FROM: HQ ACC/A7ZP
129 Andrews St., Suite 102
Langley AFB VA 23665-2969

SUBJECT: Base Realignment and Closure (BRAC) Environmental Assessment Moody Air Force Base (AFB), Georgia

1. The United States Air Force (Air Force) is in the process of preparing an Environmental Assessment (EA) to assess the potential environmental consequences of the Base Realignment and Closure (BRAC) commission recommendations at Moody AFB, GA that became law on November 9th, 2005 in accordance with the Defense Base Closure and Realignment Act of 1990 (Public Law 101-510).

2. The recommendations for Moody AFB consist of several elements: a total of 113 T-38C and T-6A trainer aircraft would be removed from Moody AFB and returned to Air Force inventory and 48 A/OA-10 aircraft from Eielson AFB, Alaska and Pope AFB, North Carolina would be relocated to Moody AFB; Moody AFB would receive base-level TF34 engine intermediate maintenance, establishing a TF34 Centralized Intermediate Repair Facility (CIRF); and the base-level ALQ-184 intermediate maintenance would be relocated from Moody AFB to an alternate location.

3. These elements would result in a net increase of approximately 760 military and civilian personnel and 37 construction projects at Moody AFB, also including lighting, radar and scoring system improvements at Grand Bay Range. The A-10s would need to utilize existing airspace and the Grand Bay and Townsend training ranges for flight and munitions training. This training would include the continued deployment of defensive countermeasures in the existing airspace and training ordnance on both Grand Bay and Townsend training ranges. Training at both locations would also include the use of white phosphorous rockets and inert heavyweight bombs. Attachment 1 is a map that depicts the locations of the airspace and training ranges to be utilized as a result of this beddown.

4. Pursuant to analysis of the proposed beddown and to support compliance with the Endangered Species Act, we would request information regarding federally listed threatened, endangered, candidate, and proposed to be listed species that occur or may occur in the potentially affected area. Please send this information to our representative at SAIC Attn: Mike Nunley, 1140 Eglin Parkway, Shalimar, FL 32579. We would appreciate your identifying a point of contact for any follow-up questions we may have. Please provide any preliminary agency comments or information regarding the proposed

beddown not later than July 8th, 2006 in order to be incorporated into the preparation of the draft EA.

Please contact the EA Project Manager, Mr. Ken Walker, at the above address or at (757) 764-9339 with any questions or concerns that you or your staff may have. Thank you for your assistance in this matter.

LARRY H. DRYDEN, P.E.
Chief, Planning Branch

Attachment:
Map of Potentially Affected Areas and Airspace

DEPARTMENT OF THE AIR FORCE
HEADQUARTERS AIR COMBAT COMMAND
LANGLEY AIR FORCE BASE, VIRGINIA

MEMORANDUM FOR: Barbara Jackson
Georgia State Clearinghouse
Room 8069
270 Washington St. SW, 8th Floor
Atlanta, GA 30334

FROM: HQ ACC/A7ZP
129 Andrews St., Suite 102
Langley AFB VA 23665-2969

SUBJECT: Base Realignment and Closure (BRAC) Environmental Assessment Moody Air Force Base (AFB), Georgia

1. The United States Air Force (Air Force) is in the process of preparing an Environmental Assessment (EA) to assess the potential environmental consequences of the Base Realignment and Closure (BRAC) commission recommendations at Moody AFB, GA that became law on November 9th, 2005 in accordance with the Defense Base Closure and Realignment Act of 1990 (Public Law 101-510).

2. The recommendations for Moody AFB consist of several elements: a total of 113 T-38C and T-6A trainer aircraft would be removed from Moody AFB and returned to Air Force inventory and 48 A/OA-10 aircraft from Eielson AFB, Alaska and Pope AFB, North Carolina would be relocated to Moody AFB; Moody AFB would receive base-level TF34 engine intermediate maintenance, establishing a TF34 Centralized Intermediate Repair Facility (CIRF); and the base-level ALQ-184 intermediate maintenance would be relocated from Moody AFB to an alternate location.

3. These elements would result in a net increase of approximately 760 military and civilian personnel and 37 construction projects at Moody AFB, also including lighting, radar and scoring system improvements at Grand Bay Range. The A-10s would need to utilize existing airspace and the Grand Bay and Townsend training ranges for flight and munitions training. This training would include the continued deployment of defensive countermeasures in the existing airspace and training ordnance on both Grand Bay and Townsend training ranges. Training at both locations would also include the use of white phosphorous rockets and inert heavyweight bombs. Attachment 1 is a map that depicts the locations of the airspace and training ranges to be utilized as a result of this beddown.

3. We request your assistance in identifying potential areas of environmental impact to be addressed in the EA. If you have any specific items of interest about the proposal, we would like to hear from you. Though we will consider comments received at any time during the environmental process, please notify us of any concerns by July 8th, 2006 in order to be incorporated into the preparation of the draft EA.

Please contact the EA Project Manager, Mr. Ken Walker, at the above address or at (757) 764-9339 with any questions or concerns that you or your staff may have. Thank you for your assistance in this matter.

LARRY H. DRYDEN, P.E.
Chief, Planning Branch

Attachment:
Map of Potentially Affected Areas and Airspace

DEPARTMENT OF THE AIR FORCE
HEADQUARTERS AIR COMBAT COMMAND
LANGLEY AIR FORCE BASE, VIRGINIA

MEMORANDUM FOR: Lauren Milligan
Coordinator, Florida State Clearinghouse
Department of Community Affairs
2555 Shumard Oak Blvd.
Tallahassee, FL 32399-2100

FROM: HQ ACC/A7ZP
129 Andrews St., Suite 102
Langley AFB VA 23665-2969

SUBJECT: Base Realignment and Closure (BRAC) Environmental Assessment Moody Air Force Base (AFB), Georgia

1. The United States Air Force (Air Force) is in the process of preparing an Environmental Assessment (EA) to assess the potential environmental consequences of the Base Realignment and Closure (BRAC) commission recommendations at Moody AFB, GA that became law on 9 NOV 2005 in accordance with the Defense Base Closure and Realignment Act of 1990 (Public Law 101-510).

2. The recommendations for Moody AFB consist of several elements: a total of 113 T-38C and T-6A trainer aircraft would be removed from Moody AFB and returned to Air Force inventory and 48 A/OA-10 aircraft from Eielson AFB, Alaska and Pope AFB, North Carolina would be relocated to Moody AFB; Moody AFB would receive base-level TF34 engine intermediate maintenance, establishing a TF34 Centralized Intermediate Repair Facility (CIRF); and the base-level ALQ-184 intermediate maintenance would be relocated from Moody AFB to an alternate location.

3. These elements would result in a net increase of approximately 760 military and civilian personnel and 37 construction projects at Moody AFB, also including lighting, radar and scoring system improvements at Grand Bay Range. The A-10s would need to utilize existing airspace and the Grand Bay and Townsend training ranges for flight and munitions training. This training would include the continued deployment of defensive countermeasures in the existing airspace and training ordnance on both Grand Bay and Townsend training ranges. Training at both locations would also include the use of white phosphorous rockets and inert heavyweight bombs. Attachment 1 is a map that depicts the locations of the airspace and training ranges to be utilized as a result of this beddown.

3. We request your assistance in identifying potential areas of environmental impact to be addressed in the EA. If you have any specific items of interest about the proposal, we would like to hear from you. Though we will consider comments received at any time during the environmental process, please notify us of any concerns by July 8th, 2006 in order to be incorporated into the preparation of the draft EA.

Please contact the EA Project Manager, Mr. Ken Walker, at the above address or at (757) 764-9339 with any questions or concerns that you or your staff may have. Thank you for your assistance in this matter.

LARRY H. DRYDEN, P.E.
Chief, Planning Branch

Attachment:
Map of Potentially Affected Areas and Airspace

DEPARTMENT OF THE AIR FORCE
HEADQUARTERS AIR COMBAT COMMAND
LANGLEY AIR FORCE BASE, VIRGINIA

MEMORANDUM FOR: Department of the Army
Savannah District, Corps of Engineers
Attn: Tom Fischer
1104 North Westover Blvd, #9
Albany, GA 31707

FROM: HQ ACC/A7ZP
129 Andrews St., Suite 102
Langley AFB VA 23665-2969

SUBJECT: Base Realignment and Closure (BRAC) Environmental Assessment Moody Air Force Base (AFB), Georgia

1. The United States Air Force (Air Force) is in the process of preparing an Environmental Assessment (EA) to assess the potential environmental consequences of the Base Realignment and Closure (BRAC) commission recommendations at Moody AFB, GA that became law on November 9th, 2005 in accordance with the Defense Base Closure and Realignment Act of 1990 (Public Law 101-510).

2. The recommendations for Moody AFB consist of several elements: a total of 113 T-38C and T-6A trainer aircraft would be removed from Moody AFB and returned to Air Force inventory and 48 A/OA-10 aircraft from Eielson AFB, Alaska and Pope AFB, North Carolina would be relocated to Moody AFB; Moody AFB would receive base-level TF34 engine intermediate maintenance, establishing a TF34 Centralized Intermediate Repair Facility (CIRF); and the base-level ALQ-184 intermediate maintenance would be relocated from Moody AFB to an alternate location.

3. These elements would result in a net increase of approximately 760 military and civilian personnel and 37 construction projects at Moody AFB, also including lighting, radar and scoring system improvements at Grand Bay Range. The A-10s would need to utilize existing airspace and the Grand Bay and Townsend training ranges for flight and munitions training. This training would include the continued deployment of defensive countermeasures in the existing airspace and training ordnance on both Grand Bay and Townsend training ranges. Training at both locations would also include the use of white phosphorous rockets and inert heavyweight bombs. Attachment 1 is a map that depicts the locations of the airspace and training ranges to be utilized as a result of this beddown.

3. We request your assistance in identifying potential areas of environmental impact to be addressed in the EA. If you have any specific items of interest about the proposal, we would like to hear from you. Though we will consider comments received at any time during the environmental process, please notify us of any concerns by July 8th, 2006 in order to be incorporated into the preparation of the draft EA.

Please contact the EA Project Manager, Mr. Ken Walker, at the above address or at (757) 764-9339 with any questions or concerns that you or your staff may have. Thank you for your assistance in this matter.

LARRY H. DRYDEN, P.E.
Chief, Planning Branch

Attachment:
Map of Potentially Affected Areas and Airspace

DEPARTMENT OF THE AIR FORCE
HEADQUARTERS AIR COMBAT COMMAND
LANGLEY AIR FORCE BASE, VIRGINIA

MEMORANDUM FOR: State Clearinghouse
Office of State Budget
1201 Main Street, Suite 870
Columbia, SC 29201

FROM: HQ ACC/A7ZP
129 Andrews St., Suite 102
Langley AFB VA 23665-2969

SUBJECT: Base Realignment and Closure (BRAC) Environmental Assessment Moody Air Force Base (AFB), Georgia

1. The United States Air Force (Air Force) is in the process of preparing an Environmental Assessment (EA) to assess the potential environmental consequences of the Base Realignment and Closure (BRAC) commission recommendations at Moody AFB, GA that became law on November 9th, 2005 in accordance with the Defense Base Closure and Realignment Act of 1990 (Public Law 101-510).

2. The recommendations for Moody AFB consist of several elements: a total of 113 T-38C and T-6A trainer aircraft would be removed from Moody AFB and returned to Air Force inventory and 48 A/OA-10 aircraft from Eielson AFB, Alaska and Pope AFB, North Carolina would be relocated to Moody AFB; Moody AFB would receive base-level TF34 engine intermediate maintenance, establishing a TF34 Centralized Intermediate Repair Facility (CIRF); and the base-level ALQ-184 intermediate maintenance would be relocated from Moody AFB to an alternate location.

3. These elements would result in a net increase of approximately 760 military and civilian personnel and 37 construction projects at Moody AFB, also including lighting, radar and scoring system improvements at Grand Bay Range. The A-10s would need to utilize existing airspace and the Grand Bay and Townsend training ranges for flight and munitions training. This training would include the continued deployment of defensive countermeasures in the existing airspace and training ordnance on both Grand Bay and Townsend training ranges. Training at both locations would also include the use of white phosphorous rockets and inert heavyweight bombs. Attachment 1 is a map that depicts the locations of the airspace and training ranges to be utilized as a result of this beddown.

3. We request your assistance in identifying potential areas of environmental impact to be addressed in the EA. If you have any specific items of interest about the proposal, we would like to hear from you. Though we will consider comments received at any time during the environmental process, please notify us of any concerns by July 8th, 2006 in order to be incorporated into the preparation of the draft EA.

Please contact the EA Project Manager, Mr. Ken Walker, at the above address or at (757) 764-9339 with any questions or concerns that you or your staff may have. Thank you for your assistance in this matter.

LARRY H. DRYDEN, P.E.
Chief, Planning Branch

Attachment:
Map of Potentially Affected Areas and Airspace

DEPARTMENT OF THE AIR FORCE
HEADQUARTERS AIR COMBAT COMMAND
LANGLEY AIR FORCE BASE, VIRGINIA

MEMORANDUM FOR: Lanier County Board of Commissioners
ATTN: George P. Jody Hamm
100 Main Street
County Courthouse
Lakeland GA 31635

FROM: HQ ACC/A7ZP
129 Andrews St., Suite 102
Langley AFB VA 23665-2969

SUBJECT: Base Realignment and Closure (BRAC) Environmental Assessment Moody Air Force Base (AFB), Georgia

1. The United States Air Force (Air Force) is in the process of preparing an Environmental Assessment (EA) to assess the potential environmental consequences of the Base Realignment and Closure (BRAC) commission recommendations at Moody AFB, GA that became law on November 9th, 2005 in accordance with the Defense Base Closure and Realignment Act of 1990 (Public Law 101-510).

2. The recommendations for Moody AFB consist of several elements: a total of 113 T-38C and T-6A trainer aircraft would be removed from Moody AFB and returned to Air Force inventory and 48 A/OA-10 aircraft from Eielson AFB, Alaska and Pope AFB, North Carolina would be relocated to Moody AFB; Moody AFB would receive base-level TF34 engine intermediate maintenance, establishing a TF34 Centralized Intermediate Repair Facility (CIRF); and the base-level ALQ-184 intermediate maintenance would be relocated from Moody AFB to an alternate location.

3. These elements would result in a net increase of approximately 760 military and civilian personnel and 37 construction projects at Moody AFB, also including lighting, radar and scoring system improvements at Grand Bay Range. The A-10s would need to utilize existing airspace and the Grand Bay and Townsend training ranges for flight and munitions training. This training would include the continued deployment of defensive countermeasures in the existing airspace and training ordnance on both Grand Bay and Townsend training ranges. Training at both locations would also include the use of white phosphorous rockets and inert heavyweight bombs. Attachment 1 is a map that depicts the locations of the airspace and training ranges to be utilized as a result of this beddown.

3. We request your assistance in identifying potential areas of environmental impact to be addressed in the EA. If you have any specific items of interest about the proposal, we would like to hear from you. Though we will consider comments received at any time during the environmental process, please notify us of any concerns by July 8th, 2006 in order to be incorporated into the preparation of the draft EA.

Please contact the EA Project Manager, Mr. Ken Walker, at the above address or at (757) 764-9339 with any questions or concerns that you or your staff may have. Thank you for your assistance in this matter.

LARRY H. DRYDEN, P.E.
Chief, Planning Branch

Attachment:
Map of Potentially Affected Areas and Airspace

DEPARTMENT OF THE AIR FORCE
HEADQUARTERS AIR COMBAT COMMAND
LANGLEY AIR FORCE BASE, VIRGINIA

MEMORANDUM FOR: City of Valdosta
ATTN: John J. Fretti, Mayor
316 East Central Avenue
Valdosta GA 31601

FROM: HQ ACC/A7ZP
129 Andrews St., Suite 102
Langley AFB VA 23665-2969

SUBJECT: Base Realignment and Closure (BRAC) Environmental Assessment Moody Air Force Base (AFB), Georgia

1. The United States Air Force (Air Force) is in the process of preparing an Environmental Assessment (EA) to assess the potential environmental consequences of the Base Realignment and Closure (BRAC) commission recommendations at Moody AFB, GA that became law on November 9th, 2005 in accordance with the Defense Base Closure and Realignment Act of 1990 (Public Law 101-510).

2. The recommendations for Moody AFB consist of several elements: a total of 113 T-38C and T-6A trainer aircraft would be removed from Moody AFB and returned to Air Force inventory and 48 A/OA-10 aircraft from Eielson AFB, Alaska and Pope AFB, North Carolina would be relocated to Moody AFB; Moody AFB would receive base-level TF34 engine intermediate maintenance, establishing a TF34 Centralized Intermediate Repair Facility (CIRF); and the base-level ALQ-184 intermediate maintenance would be relocated from Moody AFB to an alternate location.

3. These elements would result in a net increase of approximately 760 military and civilian personnel and 37 construction projects at Moody AFB, also including lighting, radar and scoring system improvements at Grand Bay Range. The A-10s would need to utilize existing airspace and the Grand Bay and Townsend training ranges for flight and munitions training. This training would include the continued deployment of defensive countermeasures in the existing airspace and training ordnance on both Grand Bay and Townsend training ranges. Training at both locations would also include the use of white phosphorous rockets and inert heavyweight bombs. Attachment 1 is a map that depicts the locations of the airspace and training ranges to be utilized as a result of this beddown.

3. We request your assistance in identifying potential areas of environmental impact to be addressed in the EA. If you have any specific items of interest about the proposal, we would like to hear from you. Though we will consider comments received at any time during the environmental process, please notify us of any concerns by July 8th, 2006 in order to be incorporated into the preparation of the draft EA.

Please contact the EA Project Manager, Mr. Ken Walker, at the above address or at (757) 764-9339 with any questions or concerns that you or your staff may have. Thank you for your assistance in this matter.

LARRY H. DRYDEN, P.E.
Chief, Planning Branch

Attachment:
Map of Potentially Affected Areas and Airspace

DEPARTMENT OF THE AIR FORCE
HEADQUARTERS AIR COMBAT COMMAND
LANGLEY AIR FORCE BASE, VIRGINIA

MEMORANDUM FOR: South Georgia Regional Development Center
ATTN: Anne-Marie Wolff
P.O. Box 1223
327 W. Savannah Ave
Valdosta, GA 31603

FROM: HQ ACC/A7ZP
129 Andrews St., Suite 102
Langley AFB VA 23665-2969

SUBJECT: Base Realignment and Closure (BRAC) Environmental Assessment Moody Air Force Base (AFB), Georgia

1. The United States Air Force (Air Force) is in the process of preparing an Environmental Assessment (EA) to assess the potential environmental consequences of the Base Realignment and Closure (BRAC) commission recommendations at Moody AFB, GA that became law on November 9th, 2005 in accordance with the Defense Base Closure and Realignment Act of 1990 (Public Law 101-510).

2. The recommendations for Moody AFB consist of several elements: a total of 113 T-38C and T-6A trainer aircraft would be removed from Moody AFB and returned to Air Force inventory and 48 A/OA-10 aircraft from Eielson AFB, Alaska and Pope AFB, North Carolina would be relocated to Moody AFB; Moody AFB would receive base-level TF34 engine intermediate maintenance, establishing a TF34 Centralized Intermediate Repair Facility (CIRF); and the base-level ALQ-184 intermediate maintenance would be relocated from Moody AFB to an alternate location.

3. These elements would result in a net increase of approximately 760 military and civilian personnel and 37 construction projects at Moody AFB, also including lighting, radar and scoring system improvements at Grand Bay Range. The A-10s would need to utilize existing airspace and the Grand Bay and Townsend training ranges for flight and munitions training. This training would include the continued deployment of defensive countermeasures in the existing airspace and training ordnance on both Grand Bay and Townsend training ranges. Training at both locations would also include the use of white phosphorous rockets and inert heavyweight bombs. Attachment 1 is a map that depicts the locations of the airspace and training ranges to be utilized as a result of this beddown.

3. We request your assistance in identifying potential areas of environmental impact to be addressed in the EA. If you have any specific items of interest about the proposal, we would like to hear from you. Though we will consider comments received at any time during the environmental process, please notify us of any concerns by July 8th, 2006 in order to be incorporated into the preparation of the draft EA.

Please contact the EA Project Manager, Mr. Ken Walker, at the above address or at (757) 764-9339 with any questions or concerns that you or your staff may have. Thank you for your assistance in this matter.

LARRY H. DRYDEN, P.E.
Chief, Planning Branch

Attachment:
Map of Potentially Affected Areas and Airspace

DEPARTMENT OF THE AIR FORCE
HEADQUARTERS AIR COMBAT COMMAND
LANGLEY AIR FORCE BASE, VIRGINIA

MEMORANDUM FOR: Mr. Wes Abler, Region Supervisor
Georgia Department of Natural Resources
1773-A Bowen's Mill Highway
Fitzgerald, GA 31750

FROM: HQ ACC/A7ZP
129 Andrews St., Suite 102
Langley AFB VA 23665-2969

SUBJECT: Base Realignment and Closure (BRAC) Environmental Assessment Moody Air Force Base (AFB), Georgia

1. The United States Air Force (Air Force) is in the process of preparing an Environmental Assessment (EA) to assess the potential environmental consequences of the Base Realignment and Closure (BRAC) commission recommendations at Moody AFB, GA that became law on November 9th, 2005 in accordance with the Defense Base Closure and Realignment Act of 1990 (Public Law 101-510).

2. The recommendations for Moody AFB consist of several elements: a total of 113 T-38C and T-6A trainer aircraft would be removed from Moody AFB and returned to Air Force inventory and 48 A/OA-10 aircraft from Eielson AFB, Alaska and Pope AFB, North Carolina would be relocated to Moody AFB; Moody AFB would receive base-level TF34 engine intermediate maintenance, establishing a TF34 Centralized Intermediate Repair Facility (CIRF); and the base-level ALQ-184 intermediate maintenance would be relocated from Moody AFB to an alternate location.

3. These elements would result in a net increase of approximately 760 military and civilian personnel and 37 construction projects at Moody AFB, also including lighting, radar and scoring system improvements at Grand Bay Range. The A-10s would need to utilize existing airspace and the Grand Bay and Townsend training ranges for flight and munitions training. This training would include the continued deployment of defensive countermeasures in the existing airspace and training ordnance on both Grand Bay and Townsend training ranges. Training at both locations would also include the use of white phosphorous rockets and inert heavyweight bombs. Attachment 1 is a map that depicts the locations of the airspace and training ranges to be utilized as a result of this beddown.

3. We request your assistance in identifying potential areas of environmental impact to be addressed in the EA. If you have any specific items of interest about the proposal, we would like to hear from you. Though we will consider comments received at any time during the environmental process, please notify us of any concerns by July 8th, 2006 in order to be incorporated into the preparation of the draft EA.

Please contact the EA Project Manager, Mr. Ken Walker, at the above address or at (757) 764-9339 with any questions or concerns that you or your staff may have. Thank you for your assistance in this matter.

LARRY H. DRYDEN, P.E.
Chief, Planning Branch

Attachment:
Map of Potentially Affected Areas and Airspace

DEPARTMENT OF THE AIR FORCE
HEADQUARTERS AIR COMBAT COMMAND
LANGLEY AIR FORCE BASE, VIRGINIA

MEMORANDUM FOR: George Constantino
Refuge Manager, Okefenokee National Wildlife Refuge
Route 2, Box 3330
Folkston, GA 31537

FROM: HQ ACC/A7ZP
129 Andrews St., Suite 102
Langley AFB VA 23665-2969

SUBJECT: Base Realignment and Closure (BRAC) Environmental Assessment Moody Air Force Base (AFB), Georgia

1. The United States Air Force (Air Force) is in the process of preparing an Environmental Assessment (EA) to assess the potential environmental consequences of the Base Realignment and Closure (BRAC) commission recommendations at Moody AFB, GA that became law on November 9th, 2005 in accordance with the Defense Base Closure and Realignment Act of 1990 (Public Law 101-510).

2. The recommendations for Moody AFB consist of several elements: a total of 113 T-38C and T-6A trainer aircraft would be removed from Moody AFB and returned to Air Force inventory and 48 A/OA-10 aircraft from Eielson AFB, Alaska and Pope AFB, North Carolina would be relocated to Moody AFB; Moody AFB would receive base-level TF34 engine intermediate maintenance, establishing a TF34 Centralized Intermediate Repair Facility (CIRF); and the base-level ALQ-184 intermediate maintenance would be relocated from Moody AFB to an alternate location.

3. These elements would result in a net increase of approximately 760 military and civilian personnel and 37 construction projects at Moody AFB, also including lighting, radar and scoring system improvements at Grand Bay Range. The A-10s would need to utilize existing airspace and the Grand Bay and Townsend training ranges for flight and munitions training. This training would include the continued deployment of defensive countermeasures in the existing airspace and training ordnance on both Grand Bay and Townsend training ranges. Training at both locations would also include the use of white phosphorous rockets and inert heavyweight bombs. Attachment 1 is a map that depicts the locations of the airspace and training ranges to be utilized as a result of this beddown.

3. We request your assistance in identifying potential areas of environmental impact to be addressed in the EA. If you have any specific items of interest about the proposal, we would like to hear from you. Though we will consider comments received at any time during the environmental process, please notify us of any concerns by July 8th, 2006 in order to be incorporated into the preparation of the draft EA.

Please contact the EA Project Manager, Mr. Ken Walker, at the above address or at (757) 764-9339 with any questions or concerns that you or your staff may have. Thank you for your assistance in this matter.

LARRY H. DRYDEN, P.E.
Chief, Planning Branch

Attachment:
Map of Potentially Affected Areas and Airspace

DEPARTMENT OF THE AIR FORCE
HEADQUARTERS AIR COMBAT COMMAND
LANGLEY AIR FORCE BASE, VIRGINIA

MEMORANDUM FOR: Lowndes County Board of Commissioners
ATTN: Rodney N. Casey, Chairman
325 West Savannah Avenue
Valdosta GA 31601

FROM: HQ ACC/A7ZP
129 Andrews St., Suite 102
Langley AFB VA 23665-2969

SUBJECT: Base Realignment and Closure (BRAC) Environmental Assessment Moody Air Force Base (AFB), Georgia

1. The United States Air Force (Air Force) is in the process of preparing an Environmental Assessment (EA) to assess the potential environmental consequences of the Base Realignment and Closure (BRAC) commission recommendations at Moody AFB, GA that became law on November 9th, 2005 in accordance with the Defense Base Closure and Realignment Act of 1990 (Public Law 101-510).

2. The recommendations for Moody AFB consist of several elements: a total of 113 T-38C and T-6A trainer aircraft would be removed from Moody AFB and returned to Air Force inventory and 48 A/OA-10 aircraft from Eielson AFB, Alaska and Pope AFB, North Carolina would be relocated to Moody AFB; Moody AFB would receive base-level TF34 engine intermediate maintenance, establishing a TF34 Centralized Intermediate Repair Facility (CIRF); and the base-level ALQ-184 intermediate maintenance would be relocated from Moody AFB to an alternate location.

3. These elements would result in a net increase of approximately 760 military and civilian personnel and 37 construction projects at Moody AFB, also including lighting, radar and scoring system improvements at Grand Bay Range. The A-10s would need to utilize existing airspace and the Grand Bay and Townsend training ranges for flight and munitions training. This training would include the continued deployment of defensive countermeasures in the existing airspace and training ordnance on both Grand Bay and Townsend training ranges. Training at both locations would also include the use of white phosphorous rockets and inert heavyweight bombs. Attachment 1 is a map that depicts the locations of the airspace and training ranges to be utilized as a result of this beddown.

3. We request your assistance in identifying potential areas of environmental impact to be addressed in the EA. If you have any specific items of interest about the proposal, we would like to hear from you. Though we will consider comments received at any time during the environmental process, please notify us of any concerns by July 8th, 2006 in order to be incorporated into the preparation of the draft EA.

Please contact the EA Project Manager, Mr. Ken Walker, at the above address or at (757) 764-9339 with any questions or concerns that you or your staff may have. Thank you for your assistance in this matter.

LARRY H. DRYDEN, P.E.
Chief, Planning Branch

Attachment:
Map of Potentially Affected Areas and Airspace

United States Department of the Interior
Fish and Wildlife Service

Okefenokee National Wildlife Refuge
Route 2 Box 3330
Folkston, Georgia 31537
(912) 496-7366

July 7, 2006

Mr. Ken Walker
EA Project Manager
HQ Acc/A7ZP
129 Andrews St., Suite 102
Langley AFB VA 23665-2969

Dear Mr. Walker:

As the manager of the Banks Lake National Wildlife Refuge that shares a common boundary with Moody Air Force Base, Georgia and a partner within the Grand Bay – Banks Lake cooperative stewardship council, I would like to express our concerns that pertain to the management of the air force base.

The Grand Bay – Banks Lake Council is striving to develop a management plan for the ecosystem that will ensure its integrity and long-term viability of the native fauna and flora, in the context of compatible human use. In developing management strategies for the Banks Lake National Wildlife Refuge portion of the ecosystem, we want to ensure that the following issues are addressed:

1) Banks Lake NWR was established "for the development, advancement, management, conservation, and protection of fish and wildlife resources…". We request flight paths that minimize disturbance to the wildlife resources.

2) Prescribed fire is the primary tool used in the maintenance of the ecosystem. During peak burning seasons, we would like less restrictions related to smoke management and access to the air space.

3) Wildlife surveys also require occasional access to the air space.

4) Periodic water level drawdowns for wildlife and habitat enhancement will need coordination between the refuge and the base since it may influence water levels throughout the system.

5) In the past, there has been a fuel tank drop onto refuge lands. Not only is there a need for established protocols for dealing with contaminated sites, it emphasizes the need for good communications between land managers in the area.

6) Banks Lake has over 200,000 visitors. We request flight paths that minimize disturbance to the recreational users of the area.

7) As more development occurs in the area, personnel, homes, and facilities are at greater risk to damage from wildfire. Development and construction should follow guidelines for fire-wise communities in order that fire will have only minimum consequences to the adjacent development. The GA Forestry Commission takes the lead on assisting communities with fire-wise development. With proper design, future fire issues can be minimized.

Thank you for addressing our concerns in the development of Moody Air Force Base's realignment. We look forward to continuing our cooperative land management stewardship with our partners in the Grand Bay – Banks Lake Council and believe we can maintain the natural resources and the function of this unique Carolina Bay system as well as provide excellent wildlife-dependent public use opportunities.

Sincerely,

George M. Constantino
Refuge Manager

United States Department of the Interior

FISH AND WILDLIFE SERVICE
Field Office
1601 Balboa Avenue
Panama City, FL 32405-3721

IN REPLY REFER TO:

Tel: (850) 769-0552
Fax: (850) 763-2177

July 11, 2006

Larry H. Dryden
HQ ACC/A7ZP
129 Andrews Street, Suite 102
Langley AFB, Virginia 23665-2969

Attn: Mr. Ken Walker

Re: FWS No. 4-P-06-218
BRAC Environmental Assessment
Florida Panhandle

Dear Mr. Dryden:

This letter acknowledges the U.S. Fish and Wildlife Service's receipt of your June 21, 2006 letter requesting information regarding federally endangered or threatened species on the project referenced above. Within the Panama City Field Office area of geographic responsibility (Figure 1), the proposed project consists of changes in type and number of aircrafts permitted along an already established flight path.

Endangered and Threatened species within a 2 nautical mile radius of the proposed route include bald eagles (*Haliaeetus leucocephalus*), red-cockaded woodpeckers (*Picoides borealis)* and wood storks (*Mycteria americana*) and migratory wadding birds (See attached Map).

Management guidelines for bald eagles recommend helicopters and fixed-wing aircraft maintain a 1,000 ft horizontal distance and 500 ft vertical distance from any nest. Also, bald eagles are capable of flight at an altitude of 10,000 ft. A Department of Defense sponsored study recommended a distance of 340 m (1115 ft) as a lowest observed effect level threshold (Efroymson et al. 2000).

Management guidelines discourage any aircraft operation within the 500 ft primary zone of a wood stork colony. In addition, we note that wood storks are also high soarers at altitudes of 3,000 ft.

Potential noise impacts to red cockaded woodpeckers (RCW) can be decreased by maintaining a distance of 100 meters (328 ft) or greater from any active nest along the flight path (Delaney et al. 2000). Red-cockaded woodpecker guidelines should be followed as determined by Moody AFB RCW management guidelines or the INRMP. Please also note, as the proposed path appears to cross Florida's Blackwater State Forest, the Florida Department of Environmental Protection should also be advised.

Other considerations should be given to impacts on migratory birds during their peak migration times. Migratory birds such as shorebirds are most likely to be disturbed by noise such as that produced by military aircraft (Efroymson et al. 2000).

These comments are intended in aiding you to address potential concerns in your environmental assessment of the proposed project and actions on endangered and threatened species and Migratory Birds. Our final review will be based on a completed environmental assessment of the proposed project and actions. Our comments pertain to actions that occur within our area of geographic responsibility. Since proposed actions also consist within the responsibility of the Services Georgia (Athens) and North Florida (Jacksonville) Field Offices, those offices may also have valuable comments on this proposal. We appreciate the opportunity to comment on the subject action. For any further assistance, please contact Ms. Caroline Stahala of my staff at extension 241.

Sincerely,

Gail A. Carmody

Gail A. Carmody
Field Supervisor

Enclosures:
Figure of FWS-Ecological Services Area of Responsibility in Florida
Map (Military Training Route)

cc:
FWS, Athens, GA
FWS, Jacksonville, FL

CS\C:/bas/Eagles\MoodyAFB Military Training Route 4-p-06-218.doc

Military Training Route

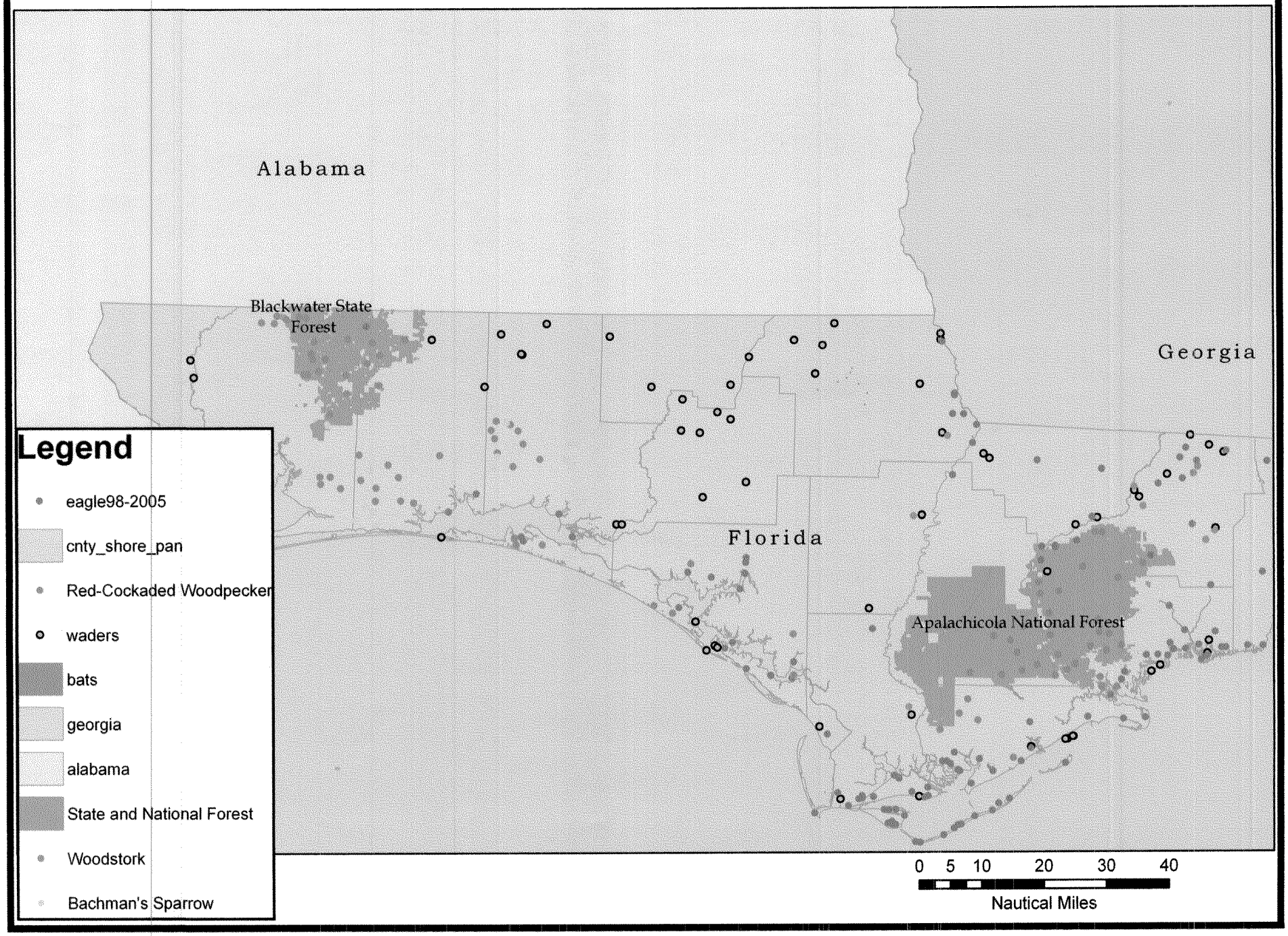

FLORIDA COUNTIES

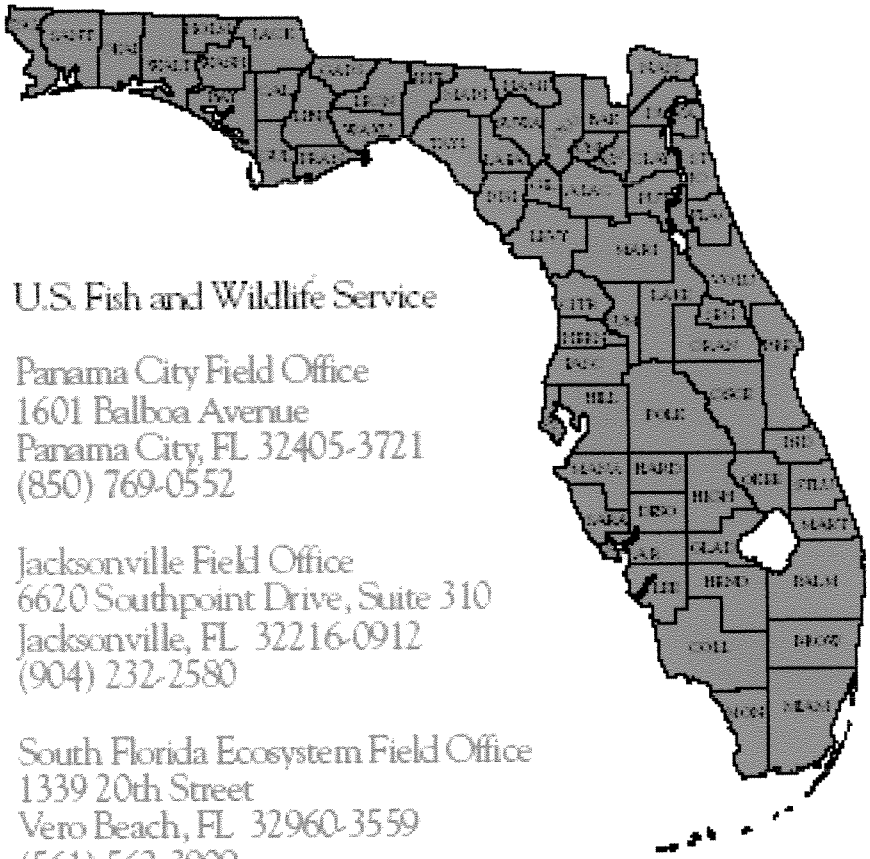

U.S. Fish and Wildlife Service

Panama City Field Office
1601 Balboa Avenue
Panama City, FL 32405-3721
(850) 769-0552

Jacksonville Field Office
6620 Southpoint Drive, Suite 310
Jacksonville, FL 32216-0912
(904) 232-2580

South Florida Ecosystem Field Office
1339 20th Street
Vero Beach, FL 32960-3559
(561) 562-3909

Alachua	Franklin	Lee	Pinellas
Baker	Gadsden	Leon	Polk
Bay	Gilchrist	Levy	Putnam
Bradford	Glades	Liberty	Santa Rosa
Brevard	Gulf	Madison	Sarasota
Broward	Hamilton	Manatee	Seminole
Calhoun	Hardee	Marion	St Johns
Charlotte	Hendry	Martin	St Lucie
Citrus	Hernando	Miami-Dade	Sumter
Clay	Highlands	Monroe	Suwannee
Collier	Hillsborough	Nassau	Taylor
Columbia	Holmes	Okaloosa	Union
De Soto	Indian River	Okeechobee	Volusia
Dixie	Jackson	Orange	Wakulla
Duval	Jefferson	Osceola	Walton
Escambia	Lafayette	Palm Beach	Washington
Flagler	Lake	Pasco	

United States Department of the Interior

Fish and Wildlife Service

105 West Park Drive, Suite D
Athens, Georgia 30606

West Georgia Sub Office
P.O. Box 52560
Ft. Benning, Georgia 31995-2560

Coastal Sub Office
4270 Norwich Street
Brunswick, Georgia 31520

JUL 12 2006

Mr. Larry H. Dryden
HQ ACC/A7ZP
129 Andrews St., Suite 102
Langley, Virginia 23665-2969
Attn: Mr. Ken Walker

Re: FWS Log # 06-TA-0731

Dear Sir:

Thank you for your recent letter concerning the proposed Base Realignment and Closure (BRAC) and its effect on Moody Air Force Base, Georgia. You requested information on endangered and threatened species in the proposed action area to include in preparing for an Environmental Assessment. We have reviewed the information you provided and submit the following comments under provisions of the Endangered Species Act of 1973 (Act) as amended (16 U.S.C. 1531 et seq.).

We have enclosed an updated list of endangered and threatened species that occur in Lanier and Lowndes counties, Georgia, along with habitat information. We believe an environmental assessment should address potential impacts to these species and their habitats, especially those which are known to occur in or near Moody Air Force Base, such as the wood stork, bald eagle, eastern indigo snake, and gopher tortoise.

We appreciate the opportunity to comment on your proposed project. If you have any questions, please write or call staff biologist Robert Brooks of our Brunswick office at (912) 265-9336, extension 25.

Sincerely,

Stuart T. Colwell for

Sandra S. Tucker
Field Supervisor

Enclosures

cc: FWS, Okefenokee NWR, Folkston, GA (Attn: Sara Aicher)

Listed Species in Lanier County
(updated May 2004)

Species	Federal Status	State Status	Habitat	Threats
Bird				
Bald eagle *Haliaeetus leucocephalus*	T	E	Inland waterways and estuarine areas in Georgia. No active nests have been reported in Lanier County in 2000-2001	Major factor in initial decline was lowered reproductive success following use of DDT. Current threats include habitat destruction, disturbance at the nest, illegal shooting, electrocution, impact injuries, and lead poisoning.
Red-cockaded woodpecker *Picoides borealis*	E	E	Nest in mature pine with low understory vegetation (<1.5m); forage in pine and pine hardwood stands > 30 years of age, preferably > 10" dbh	Reduction of older age pine stands and encroachment of hardwood midstory in older age pine stands due to fire suppression
Wood stork *Mycteria americana*	E	E	Primarily feed in fresh and brackish wetlands and nest in cypress or other wooded swamps.	Decline due primarily to loss of suitable feeding habitat, particularly in south Florida. Other factors include loss of nesting habitat, prolonged drought/flooding, raccoon predation on nests, and human disturbance of rookeries.
Reptile				
Alligator snapping turtle *Macroclemys temminckii*	No Federal Status	T	Rivers, lakes, and large ponds near stream swamps.	Destruction and modification of habitat and overharvesting.
Eastern indigo snake *Drymarchon corais couperi*	T	T	During winter, den in xeric sandridge habitat preferred by gopher tortoises; during warm months, forage in creek bottoms, upland forests, and agricultural fields	Habitat loss due to uses such as farming, construction, forestry, and pasture and to overcollecting for the pet trade
Gopher tortoise *Gopherus polyphemus*	No Federal Status	T	Well-drained, sandy soils in forest and grassy areas; associated with pine overstory, open understory with grass and forb groundcover, and sunny areas for nesting	Habitat loss and conversion to closed canopy forests. Other threats include mortality on highways and the collection of tortoises for pets.
Amphibian				
Flatwoods salamander *Ambystoma cingulatum*	T	T	Adults and subadults are fossorial; found in open mesic pine/wiregrass flatwoods dominated by longleaf or slash pine and maintained by frequent fire. During breeding period, which coincides with heavy rains from Oct.-Dec., move to isolated, shallow, small, depressions (forested with emergent vegetation) that dry completely on a cyclic basis. Last breeding record for Lanier County was in the 1930's.	Habitat destruction as a result of agricultural an silvicultural practices (e.g., clearclutting, mechanical site preparation), fire suppresion and residential and commercial development.
Plant				
Parrot pitcher-plant *Sarracenia psittacina*	No Federal Status	T	Acid soils of open bogs, wet savannahs, and low areas in pine flatwoods.	

Listed Species in Lowndes County (updated May 2004)

Species	Federal Status	State Status	Habitat	Threats
Bird				
Bald eagle *Haliaeetus leucocephalus*	T	E	Inland waterways and estuarine areas in Georgia. Active eagle nests were located in Lowndes County 1988-1999 and 2000-2002.	Major factor in initial decline was lowered reproductive success following use of DDT. Current threats include habitat destruction, disturbance at the nest, illegal shooting, electrocution, impact injuries, and lead poisoning.
Red-cockaded woodpecker *Picoides borealis*	E	E	Nest in mature pine with low understory vegetation (<1.5m); forage in pine and pine hardwood stands > 30 years of age, preferably > 10" dbh	Reduction of older age pine stands and to encroachment of hardwood midstory in older age pine stands due to fire suppression
Wood stork *Mycteria americana*	E	E	Primarily feed in fresh and brackish wetlands and nest in cypress or other wooded swamps. Active rookeries where located in 2002.	Decline due primarily to loss of suitable feeding habitat, particularly in south Florida. Other factors include loss of nesting habitat, prolonged drought/flooding, raccoon predation on nests, and human disturbance of rookeries.
Reptile				
Alligator snapping turtle *Macroclemys temminckii*	No Federal Status	T	Rivers, lakes, and large ponds near stream swamps.	Destruction and modification of habitat and overharvesting.
Eastern indigo snake *Drymarchon corais couperi*	T	T	During winter, den in xeric sandridge habitat preferred by gopher tortoises; during warm months, forage in creek bottoms, upland forests, and agricultural fields	Habitat loss due to uses such as farming, construction, forestry, and pasture and to overcollecting for the pet trade
Gopher tortoise *Gopherus polyphemus*	No Federal Status	T	Well-drained, sandy soils in forest and grassy areas; associated with pine overstory, open understory with grass and forb groundcover, and sunny areas for nesting	Habitat loss and conversion to closed canopy forests. Other threats include mortality on highways and the collection of tortoises for pets.

OFFICE OF PLANNING AND BUDGET

Sonny Perdue
Governor

Shelley C. Nickel
Director

GEORGIA STATE CLEARINGHOUSE MEMORANDUM
EXECUTIVE ORDER 12372 REVIEW PROCESS

TO: Mr. Ken Walker
HQ ACC/A7ZP
Dept. of the Air Force
129 Andrews Street, Suite 102
Langley AFB, VA 23665-2969

FROM: Barbara Jackson BJ
Georgia State Clearinghouse

DATE: June 13, 2006

SUBJECT: Solicitation for Preliminary Comments Regarding Draft EA – BRAC, Moody Air Force Base, GA

I received your request concerning the above on June 13, 2006. However, Georgia State Clearinghouse itself does not have the knowledge or expertise to provide input concerning environmental issues. Our primary function will be to coordinate intergovernmental review processing of this project once the draft EA is ready. At that time, please call me at 404-656-3855 so I can inform you how many copies will be required.

Although I will copy the submitted material and forward on to selected reviewing agencies, some of them may elect to wait to receive and review the full draft EA through my office before offering comments. (See attached memo.)

/bj

Attachment

OFFICE OF PLANNING AND BUDGET

Sonny Perdue
Governor

Shelley C. Nickel
Director

GEORGIA STATE CLEARINGHOUSE MEMORANDUM
EXECUTIVE ORDER 12372 REVIEW PROCESS

TO:	Selected RDCs	DNR/APB	DNR/HPD
	DNR/WLRD	DOT	DNR/HWM

FROM: Barbara Jackson BJ
Georgia State Clearinghouse

DATE: June 13, 2006

SUBJECT: Solicitation for Preliminary Comments Regarding Draft EA – BRAC, Moody Air Force Base, GA

The Department of the Air Force has requested preliminary input on the above-mentioned project, and I have forwarded a copy to you as well as to other selected reviewers.

In responding back to them, however, I indicated that some reviewers may decide to wait and review the actual draft EA through Clearinghouse's intergovernmental review before offering any comments. If you decide to give preliminary comments, please respond by or before ***July 8, 2006*** to:

Mr. Ken Walker
HQ ACC/A7ZP
Dept. of the Air Force
129 Andrews Street, Suite 102
Langley AFB, VA 23665-2969

/bj
Attachment

AN EQUAL OPPORTUNITY EMPLOYER
Office: 404-656-3855 270 Washington Street, S.W., Atlanta, Georgia 30334 Fax: 404-656-7916

DEPARTMENT OF THE AIR FORCE
HEADQUARTERS AIR COMBAT COMMAND
LANGLEY AIR FORCE BASE, VIRGINIA

AUG 0 4 2006

TO: Mr. Robert Brooks
U.S. Fish and Wildlife Service
Brunswick Field Office
4270 Norwick Street
Brunswick, GA 31250

FROM: HQ ACC/A7ZP
129 Andrews Street, Suite 102
Langley AFB VA 23665-2769

SUBJECT: Base Realignment and Closure (BRAC) Environmental Assessment (EA), Moody Air Force Base (AFB), Georgia

1. This letter references the Draft EA for the Base Realignment and Closure (BRAC) Actions at Moody Air Force Base (AFB), Georgia which has been provided to you under a separate transmittal letter. The Draft EA summarizes the potential environmental consequences of the proposed action, which entails replacing T-38C and T-6A aircraft with A/OA-10 aircraft.

2. We would appreciate your comments on the Draft EA by September 2, 2006, and your written concurrence with our finding that the proposed action may affect, is not likely to adversely affect federally endangered or threatened species.

3. Point of contact for this proposed action is Mr. Greg Lee (229) 257-5881 greg.lee@moody.af.mil.

LARRY H. DRYDEN, P.E.
Chief, Planning Branch

DEPARTMENT OF THE AIR FORCE
HEADQUARTERS AIR COMBAT COMMAND
LANGLEY AIR FORCE BASE, VIRGINIA

AUG 4 2006

MEMORANDUM FOR INTERESTED INDIVIDUALS, ORGANIZATIONS, PUBLIC GROUPS, AND GOVERNMENT AGENCIES

FROM: HQ ACC/A7ZP
129 Andrews Street, Suite 102
Langley AFB VA 23665-2769

SUBJECT: Base Realignment and Closure (BRAC) Environmental Assessment (EA), Moody Air Force Base (AFB), Georgia

1. We are pleased to provide you with a copy of the Draft EA for the Base Realignment and Closure (BRAC) Actions at Moody Air Force Base (AFB), Georgia. This document is provided in accordance with the National Environmental Policy Act of 1969 (NEPA) (Public Law 91-190, 42 United States Code Section 4321 – 4347), and it's implementing regulations (40 CFR Parts 1500 – 1508). Libraries are requested to file this document for public access and reference. The document is also available on www.a7zpintegratedplanning.org.

2. Comments may be submitted in writing to the address below. Written comments will be accepted through September 2, 2006.

Mr. Ken Walker, Project Manager
HQ ACC/A7ZP
129 Andrews Street, Suite 102
Langley AFB VA 23665-2769

3. For additional information, please contact the 347th Rescue Wing Public Affairs Office, Moody AFB, 1-229-251-3395.

LARRY H. DRYDEN, P.E.
Chief, Planning Branch

Attachment: Draft EA

Global Power For America

DEPARTMENT OF THE AIR FORCE
HEADQUARTERS AIR COMBAT COMMAND
LANGLEY AIR FORCE BASE, VIRGINIA

AUG 0 4 2006

MEMORANDUM FOR DISTRIBUTION

FROM: HQ ACC/A7ZP
129 Andrews Street, Suite 102
Langley AFB VA 23665-2769

SUBJECT: Base Realignment and Closure (BRAC) Environmental Assessment (EA), Moody Air Force Base (AFB), Georgia

1. We are pleased to provide you with a notification of the availability of the Draft EA for the Base Realignment and Closure (BRAC) Actions at Moody Air Force Base (AFB), Georgia. The Draft EA summarizes the potential environmental consequences of the proposed action, which entails replacing T-38C and T-6A aircraft with A/OA-10 aircraft. This notification is provided in accordance with the National Environmental Policy Act of 1969 (NEPA) (Public Law 91-190, 42 United States Code Section 4321 – 4347), and it's implementing regulations (40 CFR Parts 1500 – 1508). The document is available on www.a7zpintegratedplanning.org.

2. Comments may be submitted in writing to the address below. Written comments will be accepted through September 2, 2006.

Mr. Ken Walker, Project Manager
HQ ACC/A7ZP
129 Andrews Street, Suite 102
Langley AFB VA 23665-2769

3. For additional information or a hard copy of the Draft EA, please contact the 347th Rescue Wing Public Affairs Office, Moody AFB, 1-229-251-3395.

LARRY H. DRYDEN, P.E.
Chief, Planning Branch

Attachment: Distribution List

MOODY AFB BRAC 2006 ENVIRONMENTAL ASSESSMENT INTERGOVERNEMNTAL / INTERAGENCY COORDINATION IN ENVIRONMENTAL PLANNING (IICEP) MAILING LIST

Federal Agencies

U.S. Fish and Wildlife Service
Brunswick Field Office
Robert Brooks
4270 Norwich St.
Brunswick, GA 31520

Department of the Army
Savannah District, Corps of Engineers
Attn: Tom Fischer
1104 North Westover Blvd, #9
Albany, GA 31707

U.S. Fish and Wildlife Service
Gail Carmody
1601 Balboa Avenue
Panama City, FL 32405-3721

U.S. Fish and Wildlife Service
Elaine Snyder-Conn
1208 B Main St.
Daphne, AL 36526\

George Constantino
Refuge Manager, Okefenokee National Wildlife Refuge
Route 2, Box 3330
Folkston, GA 31537

State Agencies

Lauren Milligan
Coordinator, Florida State Clearinghouse
Department of Community Affairs
3900 Commonwealth Blvd. MS 47
Tallahassee, FL 32399-3000

Les Boles, Director
State Clearinghouse
Office of State Budget
1201 Main Street, Suite 870
Columbia, SC 29201

Barbara Jackson
Georgia State Clearinghouse
8th Floor, Room 8069
270 Washington St. SW, 8th Floor
Atlanta, GA 30334

Betsy Shirk, Environmental Review Coordinator
Georgia Department of Natural Resources
Georgia Historic Preservation Division
34 Peachtree Street NW, Suite 1600
Atlanta, GA 30303-2316

B. Wynn, Forester
Georgia Forestry Commission
5003 Jacksonville Highway
Waycross, GA 31053

Alabama Department of Environmental Management
Scott Demick
PO Box 301463
Montgomery, AL 36130-1463

Mr. Wes Abler, Region Supervisor
Georgia Department of Natural Resources
1773-A Bowen's Mill Highway
Fitzgerald, GA 31750

Local Agencies

Lowndes County Board of Commissioners
ATTN: Rodney N. Casey, Chairman
325 West Savannah Avenue
Valdosta GA 31601

Lanier County Board of Commissioners
ATTN: George P. Jody Hamm
100 Main Street
County Courthouse
Lakeland GA 31635

City of Valdosta
ATTN: John J. Fretti, Mayor
316 East Central Avenue
Valdosta GA 31601

South Georgia Regional Development Center
ATTN: Anne-Marie Wolff
P.O. Box 1223
327 W. Savannah Ave
Valdosta, GA 31603

Individuals receiving letters

Sheriff Nick Norton
Naylor GA 31641

Dr. Brad Bergstrom
Valdosta, GA 31698-0015

Dr. Mitch Lockhart
Valdosta, GA 31698-0015

Tribal Notification Letters

Mr. Emman Spain
THPO
Seminole Nation of Oklahoma
P O Box 1498
Wewoka OK 74884

Mr. Lowell Wesley, MEKKO
Kialegee Tribal Town of the Muscogee (Creek) Nation
P O Box 332
Wetumka OK 74883

Ms. Grace Bunner
Town King
Thlopthlocco Tribal Town
Box 706
Okemah OK 74859

Mr. Tarpie Yargee
Chief
Alabama-Quassarte Tribal Town
117 N Main Street
Wetumka OK 74883

Mrs. Gale Thrower
Tribal Historian
Poarch Band of Creek Indians
5811 Jack Springs Road
Atmore AL 36502-5025

Tribal HPO
Miccosukee Business Committee
P O Box 440021 – Tamiami Station
Miami FL 33144

Mr. Mitchell Cypress
Chairman
Seminole Tribe of Florida
6300 Stirling Road
Hollywood FL 33024

Mr. Bobby C. Billie
c/o Shannon Larsen
9041 139 Court
Live Oak FL 32064-6345

Mr. John Thomas
Chairman
Florida Tribe of Eastern Creek Indians
P O Box 3028
Bruce FL 32455

Mr. Perry Beaver
Principal Chief
Muscogee (Creek) Nation
P O Box 580
Okmulgee OK 74447

Mr. Roland Poncho
Chairperson
Alabama-Coushatta Tribe of Texas
Route 3 Box 640
Livingston TX 77351

The Department of the Air Force Invites Public Comments On the Draft Environmental Assessment on the BRAC Recommendations for Moody Air Force Base (AFB), Georgia.

Air Combat Command has prepared a Draft Environmental Assessment (EA) to analyze the potential environmental consequences from the implementation of the Defense Base Realignment and Closure (BRAC) Commission recommendations for Moody AFB. The Draft EA assesses the recommendations to distribute the 68 T-38C and 45 T-6A aircraft currently located at Moody AFB to other Air Education and Training locations and to place 48 A/OA-10 aircraft at Moody AFB. The Draft EA also assesses the establishment of a TF34 Centralized Intermediate Maintenance Facility (CIRF) at Moody AFB and the departure of the CIRF for ALQ-184 pods.

The analysis addresses the construction and renovation of facilities to support the beddown of the A/OA-10 aircraft, the potential effects of approximately 1,000 additional personnel, the expanded use of Grand Bay and Townsend Ranges and the continued use of military training airspace. The analysis also assesses the environmental consequences of the no action alternative.

The Draft EA and a Draft Finding of No Significant Impact are available for review beginning August 4, 2006 at the locations below. Comments should be submitted by September 2, 2006.

Valdosta-Lowndes County Library	300 Woodrow Wilson Drive Valdosta
Miller Lakeland Library	124 South Valdosta Road Lakeland

For general information, please contact Moody AFB Public Affairs Office, Capt Gary Arasin at (229) 257-3395. Send written comments to:

ACC/A7ZP
129 Andrews Street, Suite 102
Langley AFB, VA 23665-2107
ATTN: Ken Walker

8/8/6

DEPARTMENT OF THE AIR FORCE
HEADQUARTERS AIR COMBAT COMMAND
LANGLEY AIR FORCE BASE, VIRGINIA

Ken Walker

AUG 0 4 2006

TO: Mr. Robert Brooks
U.S. Fish and Wildlife Service
Brunswick Field Office
4270 Norwick Street
Brunswick, GA 31250

FROM: ~~HQ ACC/A7ZP~~
129 Andrews Street, Suite 102
Langley AFB VA 23665-2769

SUBJECT: Base Realignment and Closure (BRAC) Environmental Assessment (EA), Moody Air Force Base (AFB), Georgia

1. This letter references the Draft EA for the Base Realignment and Closure (BRAC) Actions at Moody Air Force Base (AFB), Georgia which has been provided to you under a separate transmittal letter. The Draft EA summarizes the potential environmental consequences of the proposed action, which entails replacing T-38C and T-6A aircraft with A/OA-10 aircraft.

2. We would appreciate your comments on the Draft EA by September 2, 2006, and your written concurrence with our finding that the proposed action may affect, is not likely to adversely affect federally endangered or threatened species.

3. Point of contact for this proposed action is Mr. Greg Lee (229) 257-5881 greg.lee@moody.af.mil.

LARRY H. DRYDEN, P.E.
Chief, Planning Branch

U. S. Fish and Wildlife Service
Georgia Ecological Services
105 West Park Drive, Suite D, Athens, Georgia 30606
Phone: (706) 613-9493 Fax: (706) 613-6059
FWS Log No. 06-I-1038

The Service has reviewed the plans for this proposed project. Based on the information you provided, no further action is required under Section 7(a)(2) of the Endangered Species Act. However, if new information or changes in the project involve federally listed species, further consultation with the Service will be required.

Sandra S. Tucker, Field Supervisor 9-1-06
Date

06-I-1038

Global Power For America

United States Department of the Interior
Fish and Wildlife Service

Okefenokee National Wildlife Refuge
Route 2 Box 3330
Folkston, Georgia 31537
(912) 496-7366

August 30, 2006

Mr. Ken Walker
EA Project Manager
HQ Acc/A7ZP
129 Andrews St., Suite 102
Langley AFB VA 23665-2969

Dear Mr. Walker:

As the manager of the Banks Lake National Wildlife Refuge that shares a common boundary with Moody Air Force Base, Georgia and a partner within the Grand Bay – Banks Lake cooperative stewardship council, I would like to make formal comments on Moody Air Force Base's Draft EA for the Base Realignment and Closure Actions.

1) I believe that Banks Lake National Wildlife Refuge and Georgia DNR's Grand Bay Wildlife Management Area need to be described specifically in 3.8.2.4 Vicinity and Regional Land Use. The refuge's mission, programs, and values should be presented to identify potential conflicts (see attached). Currently there is only brief location information on these Special Use Management Areas under 3.8.2.5 Airspace. A category in Table 3.8-1. Moody 1 MOA should also be added to reflect Special Use Areas. There are several other appropriate locations in the document such as discussions on Noise, Safety, Wildlife, and Airspace to address specific consequences to Moody AFB's neighbors.

2) The final EA should recognize the Grand Bay – Banks Lake Council of which Moody AFB is a key member. This group is strengthening partnerships in the management of the ecosystem to ensure its integrity and long-term viability of the native fauna and flora in the context of compatible human use. This is a forum towards understanding each parties goals and working toward compromises to protect the environment. It is also an avenue to encourage communication and cooperation during emergency situations.

3) Throughout the EA, the environmental analysis says there would be no significant impacts to wildlife from the use of white phosphorous rockets. It is known that white phosphorous deposited in an Army Artillery Range in Alaska was a significant cause of waterfowl mortality (http://www.crrel.usace.army.mil/erf/history/). The area eventually became a super fund site and DOD spent millions to clean up the area. Please acknowledge that white phosphorous munitions have caused significant problems on other ranges and address how the situation and impacts at Moody AFB will be different.

4) The sandhill cranes are a key component of the landscape. Knowledge of their annual and daily movements is critical in avoiding collisions. Further discussions on the use patterns of sandhill cranes within Grand Bay Range in 3.6.2.2. may identify problem areas.

5) Prescribed fire is the primary tool used in the maintenance of the Grand Bay/Banks Lake ecosystem. Please address how the new alignment may impact restrictions on burning.

6) Banks Lake National Wildlife Refuge has over 200,000 visitors each year. The impacts on recreational users need to be addressed specifically within the discussions of Noise and Safety. Grand Bay Wildlife Management Area also has a significant number of educational groups using the area.

Thank you for addressing our concerns in the development of Moody Air Force Base's realignment.

Sincerely,

George M. Constantino
Refuge Manager

U.S. Fish & Wildlife Service

Banks Lake National Wildlife Refuge

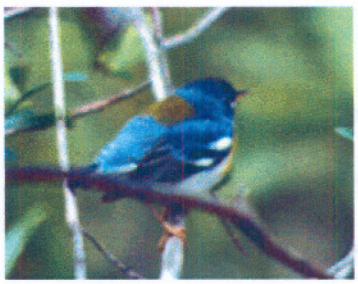

Route 2, Box 3330
Folkston, GA 31537
(912) 496-7366
FAX: (912) 496-3332
E-mail: okefenokee@fws.gov

Directions to Refuge

Fact Sheet

Refuge Facts

- Established: 1985.
- Size: 4,049 acres (1,000 acres open water+3,049 acres marsh, hardwood swamp, upland).
- Located in Lanier County, GA.
- Location: western half of Lanier Co. in southern Georgia, 2 miles west of Lakeland, GA along State Highway 122.
- Administered under Okefenokee NWR.

Natural History:

- Banks Lake is a natural Pocosin or Mill Pond probably created by tidal action of the ocean and shaped by a more temperate climate thousands of years ago.
- In the mid-1800's, Joshua Lee built a low-level dam across the drainage creek on his property and utilized the impounded running water to power a grist mill to grind corn, wheat, and rice. The impounded lake and accompanying mill established the area as a trade center along the early stagecoach route between Waycross and Thomasville, GA.
- In the 1920's, the E.D. Rivers family attempted to develop the area around the lake for electric power and home development.
- In the 1970's , the E.D. Rivers Estate threatened to drain the lake and harvest the "lightered stumps" and cypress trees.
- The Nature Conservancy purchased the land from the E.D. Rivers Estate on March 14, 1980.
- In April, 1980, the U.S. Fish and Wildlife Service entered into a lease agreement with The Nature Conservancy for management and operation of Banks Lake.
- On February 22, 1985, the U.S. Fish and Wildlife Service purchased Banks Lake from The Nature Conservancy.

Financial Impact of Refuge:

- This refuge has no operational budget. Okefenokee National Wildlife Refuge supplies all of the manpower and supplies. Any costs incurred are paid out of Okefenokee funds.
- Public use at the refuge is estimated at 20,000 visitors per year.

Refuge Objectives:

- To provide optimum habitat for a wide diversity of native fauna and flora.
- To provide optimum habitat and protection for endangered and threatened species.
- To provide opportunities for fish and wildlife-oriented recreation, interpretation, and environmental education.
- To provide a showcase outdoor recreational opportunity for the physically challenged.
- To provide quality (trophy) fishing opportunities through a naturally sustaining sport fishery.

Management Tools:

- Prescribed burning of uplands.
- Spraying and periodic lake draw downs to control noxious weed growth.
- Law enforcement.

Public Use Opportunities:

- Trails (hiking and boating).
- Fishing (freshwater).
- Wildlife observation.
- Photography.
- Canoeing and Kayaking

Special Event:

First Saturday in June - **Banks Lake NWR** Youth Fishing Derby Show off your fishing skills! Have fun in a Fishing Derby for children age 3 – 15 and a CastingKids clinic and competition. Attend a knot tying demonstration and discover which knots are best for different test lines. Find out how folks "grunt worms" for bait. Bring a plain t-shirt and get free fish art to wear home. Take home free fishing information and fun gifts.

Environmental Education:

.e U.S. Fish and Wildlife Service are working with Lanier County Community Leaders to develop Environmental Education (EE) initiatives that would bring both Banks Lake NWR and the Georgia Department of Natural Resources Grand Bay Wetland Education Center into partnership. The Goals of this EE partnership will be two-fold:

- The development of curriculum bassed EE programs, volunteers and local educators will lead EE fieldtrips to Banks Lake NWR
- The Lanier County School System could utilize Banks Lake NWR as an outdoor classroom, instead of traveling to Lowndes County.

Banks Lake Outpost Concession:

Banks Lake Outpost offers canoe/kayak rentals, a selection of snacks, bait and fishing tackle, and a gift shop. Opening times vary throughout the season. Contact Banks Lake Outpost for more information at 229-482-3453.

Questions and Answers:

What kind of fish can I catch?

Sportfish most caught include largemouth bass, chain pickerel, crappie, bluegill, warmouth perch, flier, and catfish.

Is there a launch ramp and what is the fee?

There is a triple wide concrete launch ramp. No launch fee is currently charged.

Is there a concession that rents boats, motors, and canoes and sells bait?

There is a concession, Banks Lake Outpost. They rent canoes and kayaks and sell fishing and hunting licenses, bait and tackle, gifts and snacks.

Is there a horsepower limitation on the refuge?

There is no horsepower limitation on the refuge. However, due to the extensive amount of stumps and logs both floating and anchored to the bottom of the lake, idle speed or exclusive use of an electric

trolling motor is suggested.

Can't you do anything with the extensive amount of surface vegetation that is interfering with my fishing?

During 2005 and 2006, we significantly reduced the dense mats of water hyacinth (an introduced, noxious weed) by treating infected areas with an approved herbicide. Periodic winter draw downs may be required in the future if this approach does prove to be a cost effective method.

Return to: Georgia, U.S. Fish & Wildlife Service Offices

Discover America's Best Kept Secret . . .
NATIONAL WILDLIFE REFUGE

| Home | Privacy Information | Site Map | Contact Us | Got Fish & Wildlife Questions?

DEPARTMENT OF THE AIR FORCE
HEADQUARTERS AIR COMBAT COMMAND
LANGLEY AIR FORCE BASE, VIRGINIA

6 Sept 2006

United States Department of the Interior
Fish and Wildlife Service
Refuge Manager, Mr. George M. Constantino
Okefenokee National Wildlife Refuge
Route 2 Box 3330
Folkston, Georgia 31537

HQ ACC/A7ZP
129 Andrews Street, Suite 102
Langley AFB VA 23665-2769

Dear Mr. Constantino

We have reviewed your formal comments letter dated 30 Aug 2006 on the Base Realignment and Closure Environmental Assessment, Moody Air Force Base, Georgia. Included below are our comment responses corresponding to comments in your letter attached. The comments and responses will be incorporated into the final document.

(a) Response to Comment (1):

Located within the Grand Bay/Banks Lake complex is the 4,049-acre Banks Lake National Wildlife Refuge, which contains open water, marsh, hardwood swamp, and upland habitats. The habitats within the refuge provide for a wide diversity of native fauna and flora; protection for T&E species; opportunities for recreation, interpretation, and environmental education; showcases outdoor recreation for the physically challenged; and provides a quality naturally sustaining sport (trophy) fishery.

(b) Response to Comment (2):

After recognizing that the Grand Bay/Banks Lake complex should be managed as one large ecosystem, irrespective of land ownership, the major landowners within this complex created the Grand Bay/Banks Lake Council to provide for a coordinated effort in the management of the ecosystem. The Grand Bay/Banks Lake Council includes Moody AFB, US Fish and Wildlife Service, Georgia Department of Natural Resources, Georgia Department of Transportation, The Nature Conservancy, and private landowners. The mission of the Council is to develop and implement a voluntary and cooperative stewardship plan for the Grand Bay/Banks Lake ecosystem with goals that ensure the long-term viability of the native plants and animals as well as the integrity of the ecosystem, while

providing for compatible human uses. Council members use this forum to work towards protecting the ecosystem while still achieving the varied management goals of each member.

(c) Response to Comment (3):

Recent Air Force studies have evaluated the past use of white phosphorous rockets on our ranges and we have reviewed the issues that arose from extensive white phosphorous use at Fort Richardson, Alaska. In the case of Fort Richardson, white phosphorous munitions were used for 40 years from the 1950s through 1990 with approximately 17,500 pounds expended into a salt marsh during that time. This use included large white phosphorous rounds from mortars and howitzers and at an area that had been previously used by the U.S. Army as its primary munitions area since the late 1940s. Numerous studies conducted as part of the remedial activities noted that the low temperatures, highly saturated soils and anaerobic nature of the sediments at the site retarded the natural attenuation of white phosphorous. The use of white phosphorous at Grand Bay Range and the site conditions at Grand Bay Range are quite different. Use of white phosphorous at Grand Bay Range will only involve spotting charges on small rockets used to mark targets. Their use will be limited to 250 rockets annually and targets would not be located within wetlands or areas with saturated soils. The climate at Grand Bay Range will also be conducive to the natural degradation of white phosphorous. Studies have found rapid degradation at 20 degrees C in unsaturated sediments. Additionally, Moody AFB, as part of their ongoing storm water and range clearance activities, surveys and monitors the range for munitions residues and conducts periodic sweeps to recover UXO and range residue. With the implementation of the Proposed Action Moody AFB would continue these range management activities and implement a survey of the range for white phosphorous residue. If necessary the use of other upland target areas would be considered for the use of white phosphorous rockets.

(d) Response to Comment (4):

Sandhill cranes are very large soaring birds, weighing on average 6-14 lbs, is 48" long, with a wingspan of 70". Two populations of sandhill cranes interact in the Moody AFB area, an eastern migratory population and a smaller resident population. The resident birds are a subspecies called the Florida Sandhill crane and are smaller than the migratory Greater Sandhill Crane subspecies. Sandhill cranes are considered very hazardous to aircraft, therefore Moody AFB conducted a three-year study of sandhill crane movements in the Grand Bay-Banks Lake ecosystem from 1996 to 1999 utilizing radio telemetry and GPS transmitters. This study produced site-specific information on migratory and resident sandhill crane movements that was used to prepare a Moody AFB-specific Bird Avoidance Model (BAM). The Moody AFB BAM identifies local areas where sandhill cranes typically congregate for roosting and feeding to facilitate avoidance by Moody AFB aircraft. Pilots are routinely briefed on bird strike avoidance issues.

(e) Response to Comment (5):

Implementation of the Proposed Action would not affect the use of prescribed fire burns for the maintenance of the Grand Bay/Banks Lake ecosystem. Moody AFB would continue to coordinate the use of fire burns and additional restrictions to prescribed burns are not anticipated.

(f) Response to Comment (6):

Moody AFB and Banks Lake National Wildlife Refuge have shared a common boundary since the establishment of the range and the refuge base in 1985. Use of Moody AFB in the past has included a larger number of F-4, F-16, and A-10 aircraft than is proposed with the implementation of the Proposed Action. Noise levels and safety risks are anticipated to be less than those experienced in the late 1990's when a larger number and mix of aircraft were present.

We appreciate your stewardship and interest in the Base Realignment and Closure Environmental Assessment, Moody Air Force Base (AFB), Georgia. If you have questions please contact Mr. Gregory Lee at (229) 560-6093.

Sincerely

Aaron N. Wilt

Aaron N. Wilt, Capt, USAF
Acting Chief, Integrated Planning Branch

Attachment: FWS Comments

Georgia Department of Natural Resources

Noel Holcomb, Commissioner

Historic Preservation Division

W. Ray Luce, Division Director and Deputy State Historic Preservation Officer
34 Peachtree Street, Suite 1600, Atlanta, Georgia, 30303
Telephone (404) 656-2840 Fax (404) 657-1040 http://www.gashpo.org

August 15, 2006

Barbara Jackson
Georgia State Clearinghouse
Office of Planning and Budget
270 Washington Street, SW, Eighth Floor
Atlanta, Georgia, 30334

RE: Moody Air Force Base: BRAC Changes Causing 40 Renovation and Construction Projects
Lowndes County, Georgia
GA-060804-006

Dear Ms. Jackson:

The Historic Preservation Division (HPD) has reviewed the information submitted regarding the above-referenced project. Our comments are offered to assist the Georgia State Clearinghouse and the United States Air Force in complying with the provisions of Section 106 of the National Historic Preservation Act.

Based on the information provided, HPD believes that no historic structures that are listed in or eligible for listing in the National Register of Historic Places (NRHP) will be affected by this undertaking.

Furthermore, as the Environmental Assessment notes, the Moody Air Force Base (AFB) has been previously surveyed. Any ground disturbance projects that occur in the vicinity of eligible archaeological resources should be reviewed by Moody AFB cultural resource personnel and by our office.

Please refer to project number GA-060804-006 in future correspondence regarding this undertaking. If we may be of further assistance, please contact Michelle Volkema, Environmental Review Specialist at (404) 651-6546. For questions regarding archaeology, please contact Joey Charles, Review Archaeologist, at (404) 651-6433.

Sincerely,

Karen Anderson-Cordova
Manager
Planning and Local Assistance Unit

KAC:mcv

cc: Ken Walker, Project Manager, HQ ACC/A7ZP, 129 Andrews Street, Suite 102, Langley AFB, VA 23665-2769

THIS PAGE INTENTIONALLY LEFT BLANK.

C AIRSPACE

Table C-1. Current and Proposed Annual Airspace Use

Airspace Unit	*Aircraft Type*	*Current Annual Sortie-Operations*	*Proposed Annual Sortie-Operations*	*Net Change*	*Current Night Sortie-Operations[1]*	*Proposed Night Sortie-Operations[1]*
Moody 1 MOA	T-38C	8,102	0	-8,102	0	0
	T-6A	8,533	0	-8,533	20	0
	HC-130	8	8	0	0	0
	HH-60	0	0	0	0	0
	A/OA-10	0	3,760	3,760	0	108
	Other[2]	27	27	0	12	12
Total		**16,670**	**3,795**	**-12,875**	**32**	**120**
Moody 2 North MOA	T-38C	2,499	0	-2,499	0	0
	T-6A	0	0	0	0	0
	HC-130	456	456	0	186	186
	HH-60	412	412	0	211	211
	A/OA-10	0	2,004	2,004	0	0
	Other[2]	29	29	0	0	0
Total		**3,396**	**2,901**	**-495**	**397**	**397**
Moody 2 South MOA	T-38C	2,499	0	-2,499	0	0
	T-6A	0	0	0	0	0
	HC-130	456	456	0	186	186
	HH-60	412	412	0	211	211
	A/OA-10	0	2,004	2,004	0	0
	Other[2]	29	29	0	0	0
Total		**3,396**	**2,901**	**-495**	**397**	**397**
Moody 3 MOA	T-38C	16	0	-16	0	0
	T-6A	0	0	0	0	0
	HC-130	0	0	0	0	0
	HH-60	0	0	0	0	0
	A/OA-10	0	1,968	1,968	0	16
	Other[2]	421	421	0	16	16
Total		**437**	**2,389**	**1,952**	**16**	**32**
Live Oak MOA	T-38C	3,350	0	-3,350	0	24
	T-6A	0	0	0	0	0
	HC-130	0	0	0	0	0
	HH-60	0	0	0	0	0
	A/OA-10	0	572	572	0	0
	Other[2]	44	44	0	0	0
Total		**3,394**	**616**	**-2,778**	**0**	**24**

Table C-1. Current and Proposed Annual Airspace Use (continued)

Airspace Unit	*Aircraft Type*	*Current Annual Sortie-Operations*	*Proposed Annual Sortie-Operations*	*Net Change*	*Current Night Sortie-Operations[1]*	*Proposed Night Sortie-Operations[1]*
Bulldog A MOA	T-38C	0	0	0	0	0
	T-6A	0	0	0	0	0
	HC-130	0	0	0	0	0
	HH-60	0	0	0	0	0
	A/OA-10	0	312	312	0	0
	Other[2]	2,075	2,075	0	21	21
Total		**2,075**	**2,387**	**312**	**21**	**21**
Bulldog B MOA	T-38C	0	0	0	0	0
	T-6A	0	0	0	0	0
	HC-130	0	0	0	0	0
	HH-60	0	0	0	0	0
	A/OA-10	0	168	168	0	0
	Other[2]	1,785	1,785	0	27	27
Total		**1,785**	**1,953**	**168**	**27**	**27**
R-3007 Townsend Range	T-38C	0	0	0	0	
	T-6A	0	0	0	0	
	HC-130	0	0	0	0	
	HH-60	0	0	0	0	
	A/OA-10	280	1,044	764	28	160
	Other[2]	3,720	3,720	0	572	572
Total		**4,000**	**4,764**	**764**	**600**	**732**
R-3008 Grand Bay Range	T-38C	2,523	0	-2,523	0	0
	T-6A	0	0	0	0	0
	HC-130	229	229	0	145	145
	HH-60	337	337	0	224	224
	A/OA-10	5	2,964	2,959	0	112
	Other[2]	5	5	0	3	3
Total		**3,094**	**3,535**	**441**	**372**	**484**
VR-1065	T-38C	0	0	0	0	0
	T-6A	0	0	0	0	0
	HC-130	0	0	0	0	0
	HH-60	0	0	0	0	0
	A/OA-10	0	16	16	0	0
	Other[2]	14	14	0	0	0
Total		**14**	**30**	**16**	**0**	**0**

Table C-1. Current and Proposed Annual Airspace Use (continued)

Airspace Unit	*Aircraft Type*	*Current Annual Sortie-Operations*	*Proposed Annual Sortie-Operations*	*Net Change*	*Current Night Sortie-Operations*[1]	*Proposed Night Sortie-Operations*[1]
VR-1066	T-38C	63	0	-63	0	0
	T-6A	307	0	-307	0	0
	HC-130	0	0	0	0	0
	HH-60	0	0	0	0	0
	A/OA-10	0	20	20	0	0
	Other[2]	5	5	0	0	0
Total		**375**	**25**	**-350**	**0**	**0**
LATN	T-38C	0	0	0	0	0
	T-6A	1,981	0	-1,981	0	0
	HC-130	575	575	0	51	51
	HH-60	1,140	1,140	0	70	70
	A/OA-10	0	5,000	5,000	0	300
	Other[2]	0	0	0	0	0
Total		**3,696**	**6,715**	**3,019**	**121**	**421**

[1] Night = 10:00 P.M. to 7:00 A.M., primarily 10 P.M. to Midnight.
[2] Other refers to aircraft which would not use the airspace regularly but which may conduct infrequent training or participate in infrequent large-force exercises (e.g., F-18, F-15, AV-8B, and F-16).

Table C-2. Summary of Aircraft Profiles with Altitude Breakouts

Airspace	Aircraft Type	Minutes In Airspace	Operational Data		Altitude Profile – % Sorties by Altitude (ft)				
			Avg. % Power	Avg. KIAS	100-499 AGL	500-999 AGL	1,000-2,999 MSL	3,000-4,999 MSL	≥5,000 MSL
Moody 1 MOA	T-38	30	90	300	0	0	0	0	100
	T-6A	40	80	180	0	0	0	0	100
	HC-130	45	50	200	0	0	0	0	100
	A/OA-10[3]	40	90	275	0	0	0	0	100
	Other[2]	40	85	480	0	0	0	0	100
Moody 2 North MOA	T-38C	40	90	420	0	90	10	0	0
	HC-130	60	45	150	0	0	100	0	0
	HH-60	90	60	115	0	90	10	0	0
	A/OA-10[3]	40	90	275	0	80	20	0	0
	Other[2]	25	85	480	0	10	70	10	10
Moody 2 South MOA	T-38C	40	90	300	0	90	10	0	0
	HC-130	60	50	200	0	0	50	50	0
	HH-60	90	60	115	85	15	0	0	0
	A/OA-10[3]	40	90	275	30	20	50	0	0
	Other[2]	25	85	480	0	45	45	10	0
Moody 3 MOA	T-38C	30	90	300	0	0	0	0	100
	T-6A	40	80	210	0	0	0	0	100
	HC-130	45	50	200	0	0	0	0	100
	A/OA-10[3]	40	90	275	0	0	0	0	100
	Other[2]	40	85	480	0	0	0	0	100
Live Oak MOA	T-38C	30	90	300	0	0	0	0	100
	A/OA-10[3]	40	90	275	0	0	0	0	100
	Other[2]	30	85	480	0	0	0	0	100
Bulldog A MOA	A/OA-10[3]	30	90	275	0	15	85	0	0
	Other[2]	30	85	480	0	0	10	80	10
Bulldog B MOA	A/OA-10[3]	30	90	275	0	0	0	0	100
	Other[2]	30	85	480	0	0	0	0	100
R-3007 Townsend Range	A/OA-10[3]	30	90	275	0	15	0	20	65
	Other[2]	30	85	480		3	50	47	0
R-3008 Grand Bay Range	T-38C	30	90	300	55	25	20	0	0
	HC-130	45	50	200		45	40	5	10
	HH-60	90	60	115	85	10	0	5	0
	A/OA-10[3]	45	90	275	20	50	20	5	5
	Other[2]	30	85	480	0	25	50	20	5

Table C-2. Summary of Aircraft Profiles with Altitude Breakouts (continued)

Airspace	Aircraft Type	Minutes In Airspace	Operational Data		Altitude Profile – % Sorties by Altitude (ft)				
			Avg. % Power	Avg. KIAS	100-499 AGL	500-999 AGL	1,000-2,999 MSL	3,000-4,999 MSL	≥5,000 MSL
VR-1065	A/OA-10[3]	30	90	300	70	20	10	0	0
	Other[2]	40	80	180	80	20	0	0	0
VR-1066	T-38C	30	90	300	0	100	0	0	0
	T-6A	40	80	210	0	80	20	0	0
	A/OA-10[3]	30	90	300	10	85	5	0	0
	Other[2]	40	80	180					
LATN	T-6A	80	80	210	0	80	20	0	0
	HC-130	70	50	210	0	75	25	0	0
	HH-60	100	60	100	80	10	10	0	0
	A/OA-10[3]	45	75	225	5	85	10	0	0

Notes:
[1] Night = 10:00 P.M. to 7:00 A.M., primarily 10 P.M. to Midnight.
[2] Other refers to aircraft which would not use the airspace regularly but which may conduct infrequent training or participate in infrequent large-force exercises (e.g., F-18, F-15, AV-8B, and F-16).
[3] Proposed Sortie-Operations Data.

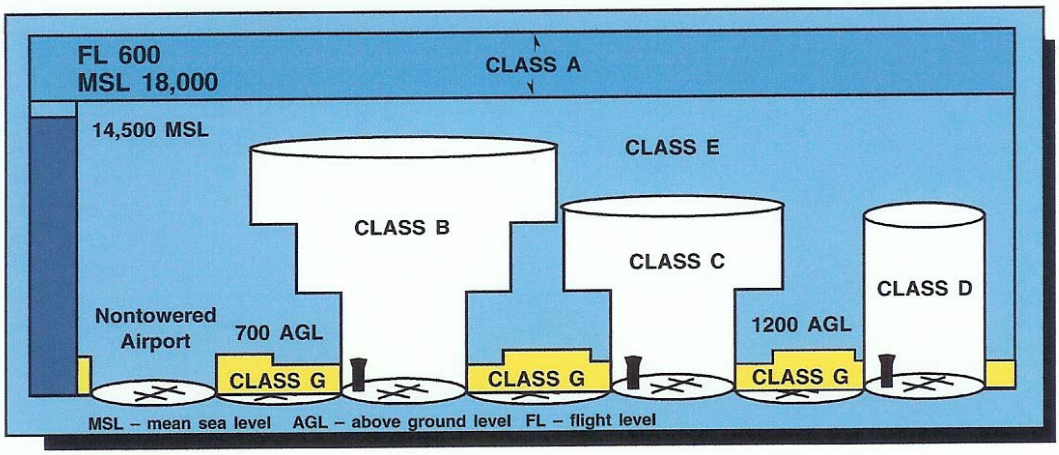

Source: DOT 2003

Figure C-1. Controlled / Uncontrolled Airspace

Specifications and Requirements for Use of VR-1065

Originating Activity: 347 OSS/OSOS, Moody AFB, GA 31699-1899; DSN 460-4544/3531, C229-4544/3531.

Scheduling Activity: 347 OSS/OSOS, Moody AFB, GA 31699-1899; Mon-Fri 0730-1630 L (excl holidays); DSN 460-4544/3531, C229-257-4544/3531.

Hours of Operation: 700-2400 local daily

Route Description

Altitude Data	*Pt*	*Fac/Rad/Dist*	*Lat/Long*
Cross at 15 MSL	A	SZW 072/31	30° 42.0′N 83° 48.0′W
01 AGL B 15 MSL to	B	SZW 050/16	30° 43.0′N 84° 08.0′W
01 AGL B 15 MSL to	C	SZW 351/11	30° 44.0′N 84° 24.0′W
01 AGL B 15 MSL to	D	SZW 264/31	30° 31.0′N 84° 58.0′W
01 AGL B 15 MSL to	E	PFN 034/28	30° 36.0′N 85° 23.9′W
10 AGL to	F	DWG 014/30	30° 58.0′N 86° 23.0′W
10 AGL B 15 MSL to	G	DWG 058/18	30°38.0′N 86° 23.0′W

Terrain Following Operations: Authorized entire route.

Route Width: 5 nm right and 6 nm left of centerline from A to B;
4 nm right and 5 nm left of centerline from B to C;
5 nm right and 2 nm left of centerline from C to D;
3 nm either side of centerline from D to F:
4 nm either side of centerline from F to G.

Special Operating Procedures:
(1) Tie-in FSS: Macon.
(2) Alternate exit D will be filed and utilized unless scheduled for 2914A.
(3) Report over D to Tyndall Approach Control.
(4) Contact Eglin Mission Control on 262.3 prior to F for clearance into R-2914A.
(5) CAUTION: IR-015 and IR-017 Parallel this route from Pt D to E. Call 187 FW DSN 358-9255 to deconflict.
(6) Alternate Entry: E
(7) Alternate Exit D. Alternate Exit E authorized only with scheduled use of TYNDALL C MOA.
(8) Notify Tyndall RAPCON (DSN 523-2900) of impending use of VR-1065 at least one hour prior to flight penetration of Tyndall C MOA with an ETA for the east boundary of the Tyndall C MOA.
(9) Minimum altitude 1500′ AGL between Points D and E. Noise Sensitive Area.
(10) CAUTION: IR-059 runs opposite direction to this route between Points C and F. IR-057 parallels this route between C and F. Call 16 OSS Hulbert Field, DSN 579-6877/7812 to deconflict.
(11) CAUTION: VR-1001 and VR-1005 cross this route near Point B.
(12) CAUTION: Numerous VR's and IR's converge near Point F.
(13) Route entry/exit times must be made plus/minus 5 minutes or route must be rescheduled.

(14) Do not overfly the town of Miccosukee, FL N30-35.0 W84-02.0. Extreme Noise Sensitive Area.
(15) Avoid overflight of Compass Lake, FL (N30-36.0 W85-23) by 1500′ or 3 nm. Extreme Noise Sensitive Area.
(16) CAUTION: Route passes within 5 nm of north side of Tallahassee Class C airspace.

FSSs within 100 nm Radius: GNV, MCN, OZR

Specifications and Requirements for Use of VR-1066

Originating Activity: 347 OSS/OSKA, Moody AFB, GA 31699-1899; DSN 460-4131, C229-257-4131.

Scheduling Activity: 3 FTS, Moody AFB, GA 31699-1899; Mon-Fri 0830-1700 local (excl holidays); DSN 460-8053, C229-257-8053.

Hours of Operation: 0700-0000 local daily.

Route Description

Altitude Data	*Pt*	*Fac/Rad/Dist*	*Lat/Long*
Cross at 15 MSL	A	VAD 090/15	30° 59.0′N 82° 54.0′W
01 AGL B 15 MSL to	B	VAD 004/25	31° 23.0′N 83° 11.0′W
01 AGL B 15 MSL to	C	AMG 302/29	31° 47.5′N 82° 59.0′W
01 AGL B 15 MSL to	D	AMG 334/33	32° 03.5′N 82° 41.0′W
01 AGL B 15 MSL to	E	AMG 063/22	31° 42.0′N 82° 08.0′W
10 AGL to	F	AMG 107/38	31° 21.0′N 81° 48.0′W
10 AGL B 15 MSL to	G	AMG 148/38	31° 00.0′N 82° 07.0′W
15 AGLl TO	F	VAD 121/17	30° 50.0′N 82° 54.0′W

Terrain Following Operations: Authorized entire route.

Route Width: 5 nm either side of centerline A to B;
7 nm right and 6 nm left of centerline B to C;
5 nm either side from C to D;
3 nm right and 9 nm left of centerline D to E:
9 nm right and 2 nm left of centerline E to F
3 nm right and 8 nm left of centerline F to G
3 nm right and 10 nm left of centerline G to H.

Special Operating Procedures:

(1) Tie-in FSS: Macon.
(2) Alternate Exit Point: E and G
(3) Alternate Entry Point: B and F.
(4) Point G to Highway 441, maintain altitude of 1500 feet AGL
(5) Point A and H are within Moody 2 MOA airspace. Contact Valdosta Approach Control on frequency 233.7 for deconfliction prior to MOA entry.
(6) Avoid overflight of Hatch Power Plant located at (N31-56.3 W82-20.6) by 1500′ or 3 nm.
(7) CAUTION: VR-1002/1003 parallel this route from Point A to B. Contact FACSFAC Jacksonville DSN 942-2004/2005 to deconflict.
(8) CAUTION: IR-016 runs opposite direction between Point A and B. 347 OSS will deconflict VR-1066 Point A from IR-016 Point A by 30 minutes.
(9) CAUTION: Point B, VR-1003 crosses this route from SW to NE and VR-1002/1004 parallels this route from Point B to C.
(10) CAUTION: VR-1001 and VR-1002 cross this route at Point C.
(11) CAUTION: VR-1004 crosses this route between Point C and D.
(12) CAUTION: VR-1002/1003 and VR-1004 cross this route 10 nm prior to Point E, with VR-1003 crossing again at Point E.
(13) IR-023 crosses this route from north to south just past Point E, and from NE to SW at Point G.
(14) Route entry/exit times must be made plus/minus 5 minutes or route must be rescheduled.

(15) VR-94 (Shaw AFB, DSN 965-1118/1119) crosses right to left between Points B and C.
(16) VR-1001 (FACSFACJAX, DSN 924/2004/2005) originates S of centerline in corridor between Points E and F.
(17) VR-1003 (FACSFACJAX, DSN 924/2004/2005) crosses left to right just prior to Point F.

FSSs within 100 nm Radius: GNV, MCN

Specifications and Requirements for Use of Grand Bay Range R-3008 (A, B, C, C [A], D)

Number Name	*Effective Altitude*	*Effective Times*	*Weather*	*Controlling Agency*
R-3008A Grand Bay Range	Surface to 10,000′	Mon-Fri 1200-0300Z By NOTAM*	VFR	USAF Valdosta Approach

*6 Hours in advance.
Transient units can expect to be capped at 7,500 feet MSL when Moody RQW flying is in progress. Requires "real time" hi altitude through Grand Bay RCO. Using Agency – USAF, CO, 347 RQW, Moody AFB, GA; DSN 460-4544, C229-257-3531/4544.

R-3008B Grand Bay Range	100′AGL to 10,000′	Mon-Fri 1200-0300Z By NOTAM*	VFR	USAF Valdosta Approach

*6 Hours in advance.
Transient units can expect to be capped at 7,500 feet MSL when Moody RQW flying is in progress. Requires "real time" hi altitude through Grand Bay RCO. Using Agency – USAF, CO, 347 RQW, Moody AFB, GA; DSN 460-4544, C229-257-3531/4544.

R-3008C Grand Bay Range	500′AGL to 10,000′	Mon-Fri 1200-0300Z By NOTAM*	VFR	USAF Valdosta Approach

*6 Hours in advance.
Transient units can expect to be capped at 7,500 feet MSL when Moody WG flying is in progress. Requires "real time" hi altitude through Grand Bay RCO. Using Agency – USAF, CO, 347 RQW, Moody AFB, GA; DSN 460-4544, C229-257-3531/4544

R-3008C(A) Grand Bay Range	Surface to 1500′ AGL	Mon-Fri 1200-0300Z By NOTAM*	VFR	USAF Valdosta Approach

*6 Hours in advance.
Cir rad 1.00 nm center on N31°03′ 31.00″ W83° 04′ 15.00″. This airspace is an exclusion of R-3008C. Using Agency – USAF, CO, 347 RQW, Moody AFB, GA; DSN 460-4544, C229-257-3531/4544.

R-3008D Grand Bay Range	10,000′ to 22,999′	Mon-Fri 1200-0300Z By NOTAM*	VFR	USAF Valdosta Approach

*6 Hours in advance.

Cir rad 1.00 nm center on N31°03′ 31.00″ W83° 04′ 15.00″. This airspace is an exclusion of R-3008C. Using Agency – USAF, CO, 347 RQW, Moody AFB, GA; DSN 460-4544, C229-257-3531/4544

Specifications and Requirements for Use of Townsend Range R-3007 (A, A[A], B, C, D, E)

Number Name	*Effective Altitude*	*Effective Times*	*Weather*	*Controlling Agency*
R-3007A Townsend Range	1,500′ AGL to 5,000′	Mon-Fri 1300-2200Z By NOTAM*	VFR-IFR	FAA Jacksonville ARTCC

*24 Hours in advance.
Using Agency – GA ANG Savannah ANG Training Site (CRTC) Garden City, GA.

R-3007A(A) Townsend Range	3,001′ AGL to 5,000′	Mon-Fri 1300-2200Z By NOTAM*	VFR-IFR	FAA Jacksonville ARTCC

*24 Hours in advance.
Using Agency – GA ANG Savannah ANG Training Site (CRTC) Garden City, GA.

R-3007B Townsend Range	500′AGL to 5,000′	Mon-Fri 1300-2200Z By NOTAM*	VFR-IFR	FAA Jacksonville ARTCC

*24 Hours in advance.
Using Agency – GA ANG Savannah ANG Training Site (CRTC) Garden City, GA.

R-3007C Townsend Range	100′AGL to 13,000′	Mon-Fri 1300-2200Z By NOTAM*	VFR-IFR	FAA Jacksonville ARTCC

*24 Hours in advance.
Using Agency – GA ANG Savannah ANG Training Site (CRTC) Garden City, GA.

R-3007D Townsend Range	1,200′AGL to 13,000′	Mon-Fri 1300-2200Z By NOTAM*	VFR-IFR	FAA Jacksonville ARTCC

*24 Hours in advance.
Using Agency – GA ANG Savannah ANG Training Site (CRTC) Garden City, GA.

R-3007E Townsend Range	Surface to 13,000′	Mon-Fri 1300-2200Z By NOTAM*	VFR-IFR	FAA Jacksonville ARTCC

*24 Hours in advance.
Using Agency – GA ANG Savannah ANG Training Site (CRTC) Garden City, GA.

Specifications of Military Operations Areas (MOAs)

Table C-3. Military Operations Areas (MOAs)

MOA	*Floor (ft)*	*Ceiling (ft)**	*Responsible ARTCC**
Moody 1	8,000 MSL	UTBNI 18,000 MSL	Jacksonville
Moody 2 North	500 AGL	UTBNI 18,000 MSL	Jacksonville
Moody 2 South	100 AGL	UTBNI 18,000 MSL	Jacksonville
Live Oak	8,000 MSL	UTBNI 18,000 MSL	Jacksonville
Bulldog A	500 AGL	UTBNI 18,000 MSL	Atlanta
Bulldog B	10,000 MSL	UTBNI 18,000 MSL	Atlanta

*ARTCC = Air Route Traffic Control Center; UTBNI = up to, but not including.

THIS PAGE INTENTIONALLY LEFT BLANK.

D AIRCRAFT NOISE ANALYSIS

Noise is generally described as unwanted sound. Unwanted sound can be based on objective effects (such as hearing loss or damage to structures) or subjective judgments (community annoyance). Noise analysis thus requires a combination of physical measurement of sound, physical and physiological effects, and psycho- and socio-acoustic effects.

Section D.1 of this appendix describes how sound is measured and summarizes noise impact in terms of community acceptability and land-use compatibility. Section D.2 gives detailed descriptions of the effects of noise that lead to the impact guidelines presented in Section D.1. Section D.3 provides a description of the specific methods used to predict aircraft noise.

D.1 NOISE DESCRIPTORS AND IMPACT

Aircraft operating in Military Operations Areas (MOAs) and along Military Training Routes (MTRs) generate "subsonic" noise, which is continuous sound generated by the aircraft's engines and by air flowing over the aircraft itself.

Section D.1.1 describes the characteristics used to describe sound. Section D.1.2 describes the specific noise metrics used for noise impact analysis. Section D.1.3 describes how environmental impact and land use compatibility are judged in terms of these quantities.

D.1.1 Quantifying Sound

Measurement and perception of sound involve two basic physical characteristics: amplitude and frequency. Amplitude is a measure of the strength of the sound and is directly measured in terms of the pressure of a sound wave. Because sound pressure varies in time, various types of pressure averages are usually used. Frequency, commonly perceived as pitch, is the number of times per second the sound causes air molecules to oscillate. Frequency is measured in units of cycles per second, or hertz (Hz).

Amplitude. The loudest sounds the human ear can comfortably hear have acoustic energy one trillion times the acoustic energy of sounds the ear can barely detect. Because of this vast range, attempts to represent sound amplitude by pressure are generally unwieldy. Sound is, therefore, usually represented on a logarithmic scale with a unit called the decibel (dB). Sound on the decibel scale is referred to as a sound level. The threshold of human hearing is approximately 0 dB, and the threshold of discomfort or pain is around 120 dB.

Because of the logarithmic nature of the decibel scale, sound levels do not add and subtract directly and are somewhat cumbersome to handle mathematically. However, some simple rules of thumb are useful in dealing with sound levels. First, if a sound's intensity is doubled, the sound level increases by approximately 3 dB, regardless of the initial sound level. Thus, for example:

60 dB + 60 dB = 63 dB, and

80 dB + 80 dB = 83 dB.

The total sound level produced by two sounds of different levels is usually only slightly more than the higher of the two. For example:

60.0 dB + 70.0 dB = 70.4 dB.

Because the addition of sound levels behaves differently than that of ordinary numbers, such addition is often referred to as "decibel addition" or "energy addition." The latter term arises from the fact that a combination of decibel values consists of first converting each decibel value to its corresponding acoustic energy, then adding the energies using the normal rules of addition, and finally converting the total energy back to its decibel equivalent.

The difference in decibels between two sounds represents the ratio of the amplitudes of those two sounds. Because human senses tend to be proportional (i.e., detect whether one sound is twice as big as another) rather than absolute (i.e., detect whether one sound is a given number of pressure units bigger than another), the decibel scale correlates well with human response.

Under laboratory conditions, differences in sound level of 1 dB can be detected by the human ear. In the community, the smallest change in average noise level that can be detected is about 3 dB. A change in sound level of about 10 dB is usually perceived by the average person as a doubling (or halving) of the sound's loudness, and this relationship holds true for both loud and quieter sounds. A decrease in sound level of 10 dB actually represents a 90 percent decrease in sound intensity but only a 50 percent decrease in perceived loudness because of the nonlinear response of the human ear (similar to most human senses).

Frequency. The normal human ear can hear frequencies from about 20 Hz to about 20,000 Hz. It is most sensitive to sounds in the 1,000–4,000 Hz range. When measuring community response to noise, it is common to adjust the frequency content of the measured sound to correspond to the frequency sensitivity of the human ear. This adjustment is called A-weighting (ANSI 1988). Sound levels that have been so adjusted are referred to as A-weighted sound levels. The amplitude of A-weighted sound levels is measured in decibels. It is common for some noise analysts to denote the unit of A-weighted sounds as dBA. As long as the use of A-weighting is understood, there is no difference between dB or dBA; it is only important that the use of A-weighting be made clear. In this study, sound levels are reported in dB and are A-weighted.

Time Averaging. Sound pressure of a continuous sound varies greatly with time, so it is customary to deal with sound levels that represent averages over time. Levels presented as instantaneous (i.e., as might be read from the dial of a sound level meter) are based on averages of sound energy over either 1/8 second (fast) or 1 second (slow). The formal definitions of fast and slow levels are somewhat complex, with details that are important to the makers and users of instrumentation. They may, however, be thought of as levels corresponding to the root-mean-square sound pressure measured over the 1/8-second or 1-second periods.

The most common uses of the fast or slow sound level in environmental analysis is in the discussion of the maximum sound level that occurs from the action, and in discussions of typical sound levels. Figure D-1 is a chart of A-weighted sound levels from typical sounds. Some (air conditioner, vacuum cleaner) are continuous sounds whose levels are constant for some time. Some (automobile, heavy truck) are the maximum sound during a vehicle passby.

Some (urban daytime, urban nighttime) are averages over some extended period. A variety of noise metrics have been developed to describe noise over different time periods. These are described in Section D.1.2.

D.1.2 Noise Metrics

Maximum Sound Level

The highest A-weighted sound level measured during a single event in which the sound level changes value as time goes on (e.g., an aircraft overflight) is called the maximum A-weighted sound level or maximum sound level, for short. It is usually abbreviated by ALM, L_{max}, or L_{Amax}. The maximum sound level is important in judging the interference caused by a noise event with conversation, television or radio listening, sleeping, or other common activities.

Sound Exposure Level

Individual time-varying noise events have two main characteristics: a sound level that changes throughout the event and a period of time during which the event is heard. Although the maximum sound level, described above, provides some measure of the intrusiveness of the event, it alone does not completely describe the total event. The period of time during which the sound is heard is also significant. The Sound Exposure Level (abbreviated SEL or L_{AE} for A-weighted sounds) combines both of these characteristics into a single metric.

SEL is a composite metric that represents both the intensity of a sound and its duration. Mathematically, the mean square sound pressure is computed over the duration of the event then multiplied by the duration in seconds, and the resultant product is turned into a sound level. It does not directly represent the sound level heard at any given time, but rather provides a measure of the net impact of the entire acoustic event. It has been well established in the scientific community that SEL measures this impact much more reliably than just the maximum sound level.

Because the SEL and the maximum sound level are both used to describe single events, there is sometimes confusion between the two, so the specific metric used should be clearly stated.

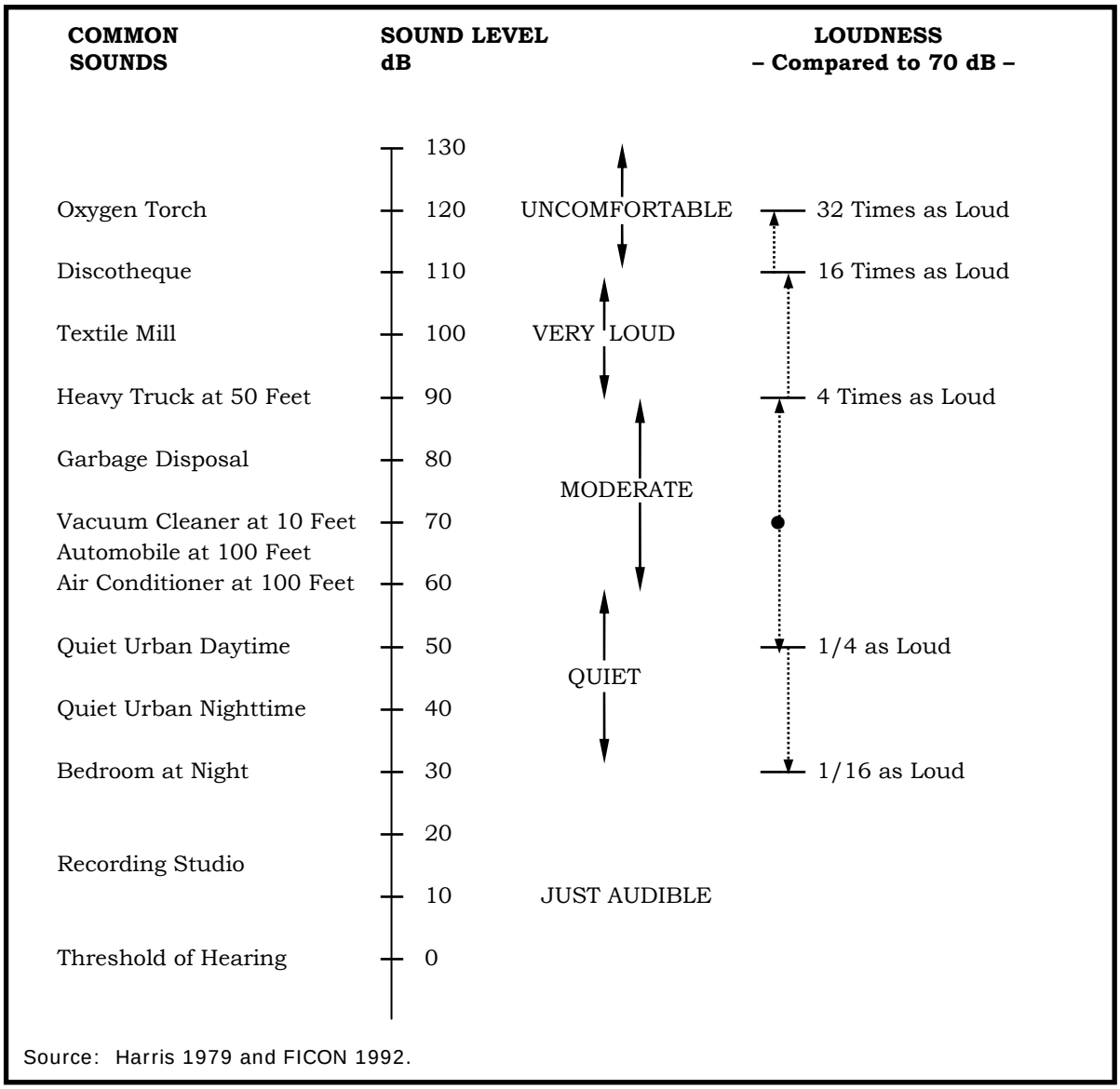

Source: Harris 1979 and FICON 1992.

Figure D-1. Typical A-Weighted Sound Levels of Common Sounds

Equivalent Sound Level

For longer periods of time, total sound is represented by the equivalent continuous sound pressure level (L_{eq}). L_{eq} is the average sound level over some time period (often an hour or a day, but any explicit time span can be specified), with the averaging being done on the same energy basis as used for SEL. SEL and L_{eq} are closely related, differing by (a) whether they are applied over a specific time period or over an event and (b) whether the duration of the event is included or divided out.

Just as SEL has proven to be a good measure of the noise impact of a single event, L_{eq} has been established to be a good measure of the impact of a series of events during a given time period. Also, while L_{eq} is defined as an average, it is effectively a sum over that time period and is, thus, a measure of the cumulative impact of noise.

Day-Night Average Sound Level

Noise tends to be more intrusive at night than during the day. This effect is accounted for by applying a 10-dB penalty to events that occur after 10 p.m. and before 7 a.m. If L_{eq} is computed over a 24-hour period with this nighttime penalty applied, the result is the day-night average sound level (DNL or L_{dn}). DNL is the community noise metric recommended by the U.S. Environmental Protection Agency (USEPA) (USEPA 1974) and has been adopted by most federal agencies (FICON 1992). It has been well established that DNL correlates well with community response to noise (Schultz 1978; Finegold et al. 1994). This correlation is presented in Section D.1.3 of this appendix.

While DNL carries the nomenclature "average," it incorporates all of the noise at a given location. For this reason, DNL is often referred to as a "cumulative" metric. It accounts for the total, or cumulative, noise impact.

Onset Rate-Adjusted Monthly Day-Night Average Sound Level

Aircraft operations in military airspace, such as MOAs and MTRs, generate a noise environment somewhat different from other community noise environments. Overflights are sporadic, occurring at random times and varying from day to day and week to week. This situation differs from most community noise environments, in which noise tends to be continuous or patterned. Individual military overflight events also differ from typical community noise events in that noise from a low-altitude, high-airspeed flyover can have a rather sudden onset.

To represent these differences, the conventional DNL metric is adjusted to account for the "surprise" effect of the sudden onset of aircraft noise events on humans (Plotkin et al. 1987; Stusnick et al. 1992; Stusnick et al. 1993). For aircraft exhibiting a rate of increase in sound level (called onset rate) of from 15 to 150 dB per second, an adjustment or penalty ranging from 0 to 11 dB is added to the normal SEL. Onset rates above 150 dB per second require an 11 dB penalty, while onset rates below 15 dB per second require no adjustment. The DNL is then determined in the same manner as for conventional aircraft noise events and is designated as Onset-Rate Adjusted Day-Night Average Sound Level (abbreviated DNL_{mr}). Because of the irregular occurrences of aircraft operations, the number of average daily operations is determined by using the calendar month with the highest number of operations. The monthly average is denoted DNL_{mr}. Noise levels are calculated the same way for both DNL and DNL_{mr}. DNL_{mr} is interpreted by the same criteria as used for DNL.

D.1.3 Noise Impact

Community Reaction

Studies of community annoyance to numerous types of environmental noise show that DNL correlates well with impact. Schultz (1978) showed a consistent relationship between DNL and annoyance. Shultz's original curve fit (Figure D-2) shows that there is a remarkable consistency in results of attitudinal surveys that relate the percentages of groups of people who express various degrees of annoyance when exposed to different DNLs.

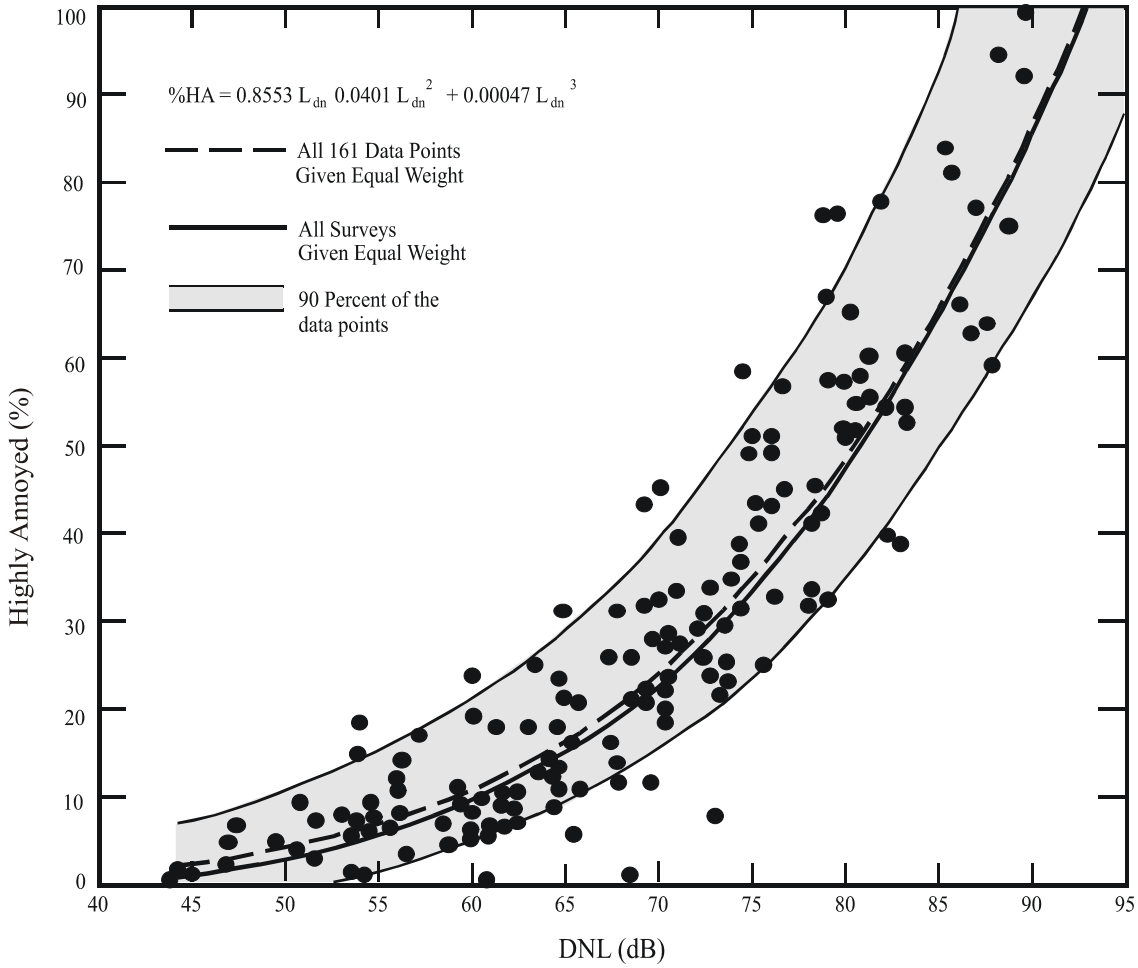

Figure D-2. Community Surveys of Noise Annoyance (Source: Schultz 1978)

A more recent study has reaffirmed this relationship (Fidell et al. 1991). Figure D-3 shows an updated form of the curve fit (Finegold et al. 1994) in comparison with the original. The updated fit, which does not differ substantially from the original, is the current preferred form. In general, correlation coefficients of 0.85 to 0.95 are found between the percentages of groups of people highly annoyed and the level of average noise exposure. The correlation coefficients for the annoyance of individuals are relatively low, however, on the order of 0.5 or less. This is not surprising, considering the varying personal factors that influence the manner in which individuals react to noise. Nevertheless, findings substantiate that community annoyance to aircraft noise is represented quite reliably using DNL.

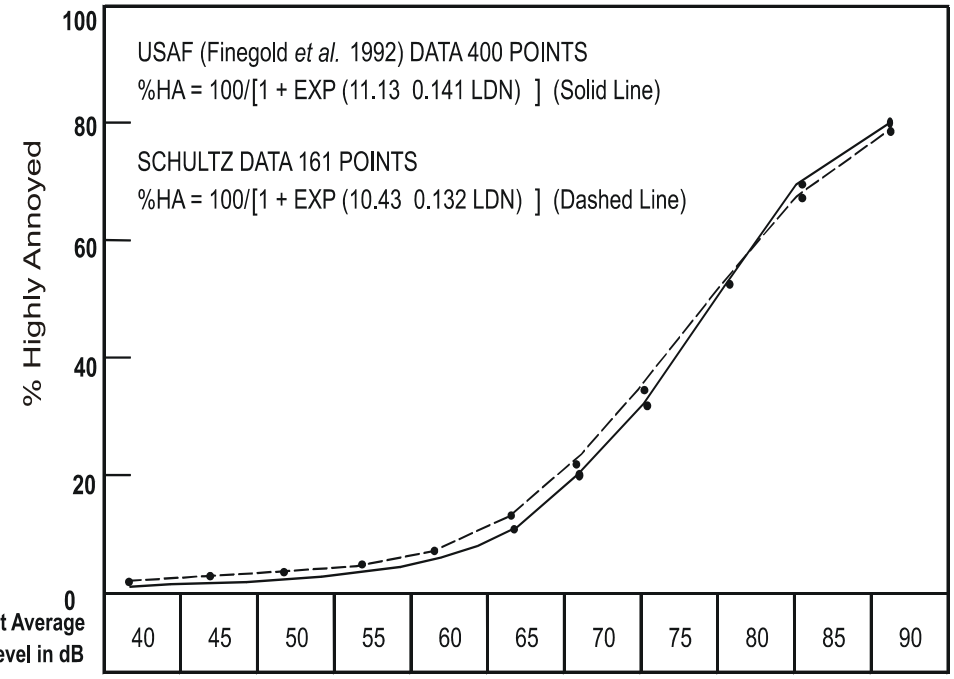

Calculated %HA Points												
	USAF	0.41	0.831	1.66	3.31	6.48	12.29	22.1	36.47	53.74	70.16	82.64
	SCHULTZ	0.576	1.11	2.12	4.03	7.52	13.59	23.32	37.05	53.25	68.78	81

Figure D-3. Response of Communities to Noise; Comparison of Original (Schultz 1978) and Current (Finegold et al. 1994) Curve Fits.

As noted earlier for SEL, DNL does not represent the sound level heard at any particular time, but rather represents the total sound exposure. DNL accounts for the sound level of individual noise events, the duration of those events, and the number of events. Its use is endorsed by the scientific community (ANSI 1980; ANSI 1988; USEPA 1974; FICUN 1980; FICON 1992).

While DNL is the best metric for quantitatively assessing cumulative noise impact, it does not lend itself to intuitive interpretation by non-experts. Accordingly, it is common for environmental noise analyses to include other metrics for illustrative purposes. A general indication of the noise environment can be presented by noting the maximum sound levels that can occur and the number of times per day noise events will be loud enough to be heard. Use of other metrics as supplements to DNL has been endorsed by federal agencies (FICON 1992).

The Schultz curve is generally applied to annual average DNL. In Section D.1.2, DNL_{mr} was described and presented as being appropriate for quantifying noise in military airspace. In the current study, the Schultz curve is used with DNL_{mr} as the noise metric. DNL_{mr} is always equal to or greater than DNL, so impact is generally higher than would have been predicted if the onset rate and busiest-month adjustments were not accounted for.

There are several points of interest in the noise-annoyance relation. The first is a DNL of 65 dB. This is a level most commonly used for noise planning purposes and represents a compromise between community impact and the need for activities, such as aviation, that cause noise. Areas exposed to DNL above 65 dB are generally not considered suitable for residential use. The second is a DNL of 55 dB, which was identified by USEPA as a level "... requisite to protect the public health and welfare with an adequate margin of safety," (USEPA 1974). It is essentially a level below which adverse impact is not expected. The third is a DNL of 75 dB. This is the lowest level at which adverse health effects could be credible (USEPA 1974). The very high annoyance levels correlated with a DNL of 75 dB make such areas unsuitable for residential land use.

Table D-1 shows the relation between annoyance and DNL, based on the Finegold study.

Table D-1. Relation Between Annoyance and DNL

% Highly Annoyed	*DNL*
2	50
3	55
7	60
12	65
22	70
36	75

Land Use Compatibility

As noted above, the inherent variability between individuals makes it impossible to predict accurately how any individual will react to a given noise event. Nevertheless, when a community is considered as a whole, its overall reaction to noise can be represented with a high degree of confidence. As described above, the best noise exposure metric for this correlation is the DNL or DNL_{mr} for military overflights.

In June 1980, an ad hoc Federal Interagency Committee on Urban Noise (FICUN) published guidelines (FICUN 1980) relating DNL to compatible land uses. This committee was composed of representatives from the United States Departments of Defense (DoD), Transportation, and Housing and Urban Development; USEPA; and the Veterans Administration. Since their issuance, federal agencies have generally adopted these guidelines for noise analyses.

Following the lead of the committee, DoD and FAA adopted the concept of land-use compatibility as the accepted measure of aircraft noise effect. The FAA included the committee's guidelines in the Federal Aviation Regulations (USDOT 1984). These guidelines are reprinted in Table D-2, along with the explanatory notes included in the regulation. Although these guidelines are not mandatory (note the footnote "*" in the table), they provide the best means for determining noise impact in airport communities. In general, residential land uses normally are not compatible with outdoor DNL values above 65 dB, and the extent of land areas and populations exposed to DNL of 65 dB and higher provides the best means for assessing the noise impacts of alternative aircraft actions. In some cases, where noise change exceeds 3 dB, the 1992 FICON indicates the 60 dB DNL may be a more appropriate incompatibility level for densely populated areas.

D.2 NOISE EFFECTS

The discussion in Section D.1.3 presents the global effect of noise on communities. The following sections describe particular noise effects.

D.2.1 Hearing Loss

Noise-induced hearing loss is probably the best defined of the potential effects of human exposure to excessive noise. Federal workplace standards for protection from hearing loss allow a time-average level of 90 dB over an 8-hour work period, or 85 dB averaged over a 16-hour period. Even the most protective criterion (no measurable hearing loss for the most sensitive portion of the population at the ear's most sensitive frequency, 4,000 Hz, after a 40-year exposure) suggests a time-average sound level of 70 dB over a 24-hour period (USEPA 1974). Since it is unlikely that airport neighbors will remain outside their homes 24 hours per day for extended periods of time, there is little possibility of hearing loss below a DNL of 75 dB, and this level is extremely conservative.

D.2.2 Nonauditory Health Effects

Nonauditory health effects of long-term noise exposure, where noise may act as a risk factor, have not been found to occur at levels below those protective against noise-induced hearing loss, described above. Most studies attempting to clarify such health effects have found that noise exposure levels established for hearing protection will also protect against any potential nonauditory health effects, at least in workplace conditions. The best scientific summary of these findings is contained in the lead paper at the National Institutes of Health Conference on Noise and Hearing Loss, held on January 22–24, 1990, in Washington, D.C., which states "The nonauditory effects of chronic noise exposure, when noise is suspected to act as one of the risk factors in the development of hypertension, cardiovascular disease, and other nervous

Table D-2. Land-Use Compatibility with Yearly Day-Night Average Sound Levels

	Yearly Day-Night Average Sound Level (DNL) in Decibels					
Land Use	*Below 65*	*65–70*	*70–75*	*75–80*	*80–85*	*Over 85*
Residential						
Residential, other than mobile homes and transient lodgings	Y	N(1)	N(1)	N	N	N
Mobile home parks	Y	N	N	N	N	N
Transient lodgings	Y	N(1)	N(1)	N(1)	N	N
Public Use						
Schools	Y	N(1)	N(1)	N	**N**	**N**
Hospitals and nursing homes	Y	25	30	N	N	N
Churches, auditoria, and concert halls	Y	25	30	N	N	N
Government services	Y	Y	25	30	N	N
Transportation	Y	Y	Y(2)	Y(3)	Y(4)	Y(4)
Parking	Y	Y	Y(2)	Y(3)	Y(4)	N
Commercial Use						
Offices, business, and professional	Y	Y	25	30	N	N
Wholesale and retail—building materials, hardware, and farm equipment	Y	Y	Y(2)	Y(3)	Y(4)	N
Retail trade—general	Y	Y	25	30	N	N
Utilities	Y	Y	Y(2)	Y(3)	Y(4)	N
Communication	Y	Y	25	30	N	N
Manufacturing and Production						
Manufacturing, general	Y	Y	Y(2)	Y(3)	Y(4)	N
Photographic and optical	Y	Y	25	30	N	N
Agriculture (except livestock) and forestry	Y	Y(6)	Y(7)	Y(8)	Y(8)	Y(8)
Livestock farming and breeding	Y	Y(6)	Y(7)	N	N	N
Mining and fishing, resource production, and extraction	Y	Y	Y	Y	Y	Y
Recreational						
Outdoor sports arenas and spectator sports	Y	Y(5)	Y(5)	N	N	N
Outdoor music shells, amphitheaters	Y	N	N	N	N	N
Nature exhibits and zoos	Y	Y	N	N	N	N
Amusements, parks, resorts, and camps	Y	Y	Y	N	N	N
Golf courses, riding stables, and water recreation	Y	Y	25	30	N	N

Table D-2. Land-Use Compatibility with Yearly Day-Night Average Sound Levels (continued)

Numbers in parentheses refer to notes.

* The designations contained in this table do not constitute a federal determination that any use of land covered by the program is acceptable or unacceptable under federal, state, or local law. The responsibility for determining the acceptable and permissible land uses and the relationship between specific properties and specific noise contours rests with the local authorities. FAA determinations under Part 150 are not intended to substitute federally determined land uses for those determined to be appropriate by local authorities in response to locally determined needs and values in achieving noise-compatible land uses.

KEY TO TABLE

Y (YES) = Land use and related structures compatible without restrictions.

N (No) = Land use and related structures are not compatible and should be prohibited.

NLR = Noise Level Reduction (outdoor to indoor) to be achieved through incorporation of noise attenuation into the design and construction of the structure.

25, 30, or 35 = Land Use and related structures generally compatible; measures to achieve NLR of 25, 30, or 35 dB must be incorporated into design and construction of structures.

NOTES FOR TABLE

(1) Where the community determines that residential or school uses must be allowed, measures to achieve outdoor-to-indoor NLR of at least 25 dB and 30 dB should be incorporated into building codes and be considered in individual approvals. Normal residential construction can be expected to provide an NLR of 20 dB; thus the reduction requirements are often stated as 5, 10, or 15 dB over standard construction and normally assume mechanical ventilation and closed windows year-round. However, the use of NLR criteria will not eliminate outdoor noise problems.

(2) Measures to achieve NLR 25 dB must be incorporated into the design and construction of portions of these buildings where the public is received, office areas, noise-sensitive areas, or where the normal noise level is low.

(3) Measures to achieve NLR 30 dB must be incorporated into the design and construction of portions of these buildings where the public is received, office areas, noise-sensitive areas, or where the normal noise level is low.

(4) Measures to achieve NLR 35 dB must be incorporated into the design and construction of portions of these buildings where the public is received, office areas, noise-sensitive areas, or where the normal noise level is low.

(5) Land-use compatible provided special sound reinforcement systems are installed.

(6) Residential buildings require an NLR of 25.

(7) Residential buildings require an NLR of 30.

(8) Residential buildings not permitted.

disorders, have never been proven to occur as chronic manifestations at levels below these criteria (an average of 75 dBA for complete protection against hearing loss for an 8-hour day)" (von Gierke 1990; parenthetical wording added for clarification). At the International Congress (1988) on Noise as a Public Health Problem, most studies attempting to clarify such health effects did not find them at levels below the criteria protective of noise-induced hearing loss; even above these criteria, results regarding such health effects were ambiguous.

Consequently, it can be concluded that establishing and enforcing exposure levels protecting against noise-induced hearing loss would not only solve the noise-induced hearing loss problem but also any potential nonauditory health effects in the work place.

Although these findings were directed specifically at noise effects in the workplace, they are equally applicable to aircraft noise effects in the community environment. Research studies regarding the nonauditory health effects of aircraft noise are ambiguous, at best, and often contradictory. Yet, even those studies that purport to find such health effects use time-average noise levels of 75 dB and higher for their research.

For example, in an often-quoted paper, two University of California at Los Angeles (UCLA) researchers found a relation between aircraft noise levels under the approach path to Los Angeles International Airport (LAX) and increased mortality rates among the exposed residents by using an average noise exposure level greater than 75 dB for the "noise-exposed" population (Meecham and Shaw 1979). Nevertheless, three other UCLA professors analyzed those same data and found no relation between noise exposure and mortality rates (Frerichs et al. 1980).

As a second example, two other UCLA researchers used this same population near LAX to show a higher rate of birth defects during the period of 1970 to 1972 when compared with a control group residing away from the airport (Jones and Tauscher 1978). Based on this report, a separate group at the United States Centers for Disease Control performed a more thorough study of populations near Atlanta's Hartsfield International Airport for 1970 to 1972 and found no relation in their study of 17 identified categories of birth defects to aircraft noise levels above 65 dB (Edmonds et al. 1979).

A recent review of health effects, prepared by a Committee of the Health Council of The Netherlands (CHCN 1996), analyzed currently available published information on this topic. The committee concluded that the threshold for possible long-term health effects was a 16-hour (6:00 a.m. to 10:00 p.m.) L_{eq} of 70 dB. Projecting this to 24 hours and applying the 10 dB nighttime penalty used with DNL, this corresponds to DNL of about 75 dB. The study also affirmed the risk threshold for hearing loss, as discussed earlier.

In summary, there is no scientific basis for a claim that potential health effects exist for aircraft time-average sound levels below 75 dB.

D.2.3 Annoyance

The primary effect of aircraft noise on exposed communities is one of annoyance. Noise annoyance is defined by the USEPA as any negative subjective reaction on the part of an

individual or group (USEPA 1974). As noted in the discussion of DNL above, community annoyance is best measured by that metric.

Because the USEPA Levels Document (USEPA 1974) identified DNL of 55 dB as ". . . requisite to protect public health and welfare with an adequate margin of safety," it is commonly assumed that 55 dB should be adopted as a criterion for community noise analysis. However, financial and technical resources are generally not available to achieve that goal. Most agencies have identified DNL of 65 dB as a criterion that protects those most impacted by noise, and that can often be achieved on a practical basis (FICON 1992). This corresponds to about 12 percent of the exposed population being highly annoyed.

Although DNL of 65 dB is widely used as a benchmark for significant noise impact and is often an acceptable compromise, it is not a statutory limit, and it is appropriate to consider other thresholds in particular cases.

In this Draft EA, no specific threshold is used. The noise in the affected environment is evaluated on the basis of the information presented in this appendix and in the body of the Draft EA.

D.2.4 Speech Interference

Speech interference associated with aircraft noise is a primary cause of annoyance to individuals on the ground. The disruption of routine activities in the home, such as radio or television listening, telephone use, or family conversation, gives rise to frustration and irritation. The quality of speech communication is also important in classrooms, offices, and industrial settings and can cause fatigue and vocal strain in those who attempt to communicate over the noise. Research has shown that the use of the SEL metric will measure speech interference successfully, and that a SEL exceeding 65 dB will begin to interfere with speech communication.

D.2.5 Sleep Interference

Sleep interference is another source of annoyance associated with aircraft noise. This is especially true because of the intermittent nature and content of aircraft noise, which is more disturbing than continuous noise of equal energy and neutral meaning.

Sleep interference may be measured in either of two ways. "Arousal" represents actual awakening from sleep, while a change in "sleep stage" represents a shift from one of four sleep stages to another stage of lighter sleep without actual awakening. In general, arousal requires a somewhat higher noise level than does a change in sleep stage.

An analysis sponsored by the Air Force summarized 21 published studies concerning the effects of noise on sleep (Pearsons et al. 1989). The analysis concluded that a lack of reliable in-home studies, combined with large differences among the results from the various laboratory studies, did not permit development of an acceptably accurate assessment procedure. The noise events used in the laboratory studies and in contrived in-home studies were presented at much higher rates of occurrence than would normally be experienced. None of the laboratory studies were of

sufficiently long duration to determine any effects of habituation, such as that which would occur under normal community conditions. A recent extensive study of sleep interference in people's own homes (Ollerhead et al. 1992) showed very little disturbance from aircraft noise.

There is some controversy associated with the recent studies, so a conservative approach should be taken in judging sleep interference. Based on older data, the USEPA identified an indoor DNL of 45 dB as necessary to protect against sleep interference (USEPA 1974). Assuming a very conservative structural noise insulation of 20 dB for typical dwelling units, this corresponds to an outdoor DNL of 65 dB as minimizing sleep interference.

A 1984 publication reviewed the probability of arousal or behavioral awakening in terms of SEL (Kryter 1984). Figure D-4, extracted from Figure 10.37 of Kryter (1984), indicates that an indoor SEL of 65 dB or lower should awaken less than 5 percent of those exposed. These results do not include any habituation over time by sleeping subjects. Nevertheless, this provides a reasonable guideline for assessing sleep interference and corresponds to similar guidance for speech interference, as noted above.

D.2.6 Noise Effects on Domestic Animals and Wildlife

Animal species differ greatly in their responses to noise. Each species has adapted, physically and behaviorally, to fill its ecological role in nature, and its hearing ability usually reflects that role. Animals rely on their hearing to avoid predators, obtain food, and communicate with and attract other members of their species. Aircraft noise may mask or interfere with these functions. Secondary effects may include nonauditory effects similar to those exhibited by humans: stress, hypertension, and other nervous disorders. Tertiary effects may include interference with mating and resultant population declines.

D.2.7 Noise Effects on Structures

Normally, the most sensitive components of a structure to airborne noise are the windows and, infrequently, the plastered walls and ceilings. An evaluation of the peak sound pressures impinging on the structure is normally sufficient to determine the possibility of damage. In general, at sound levels above 130 dB, there is the possibility of the excitation of structural component resonance. While certain frequencies (such as 30 Hz for window breakage) may be of more concern than other frequencies, conservatively, only sounds lasting more than 1 second above a sound level of 130 dB are potentially damaging to structural components (NRC/NAS 1977).

A study directed specifically at low-altitude, high-speed aircraft showed that there is little probability of structural damage from such operations (Sutherland 1989). One finding in that study is that sound levels at damaging frequencies (e.g., 30 Hz for window breakage or 15 to 25 Hz for whole-house response) are rarely above 130 dB.

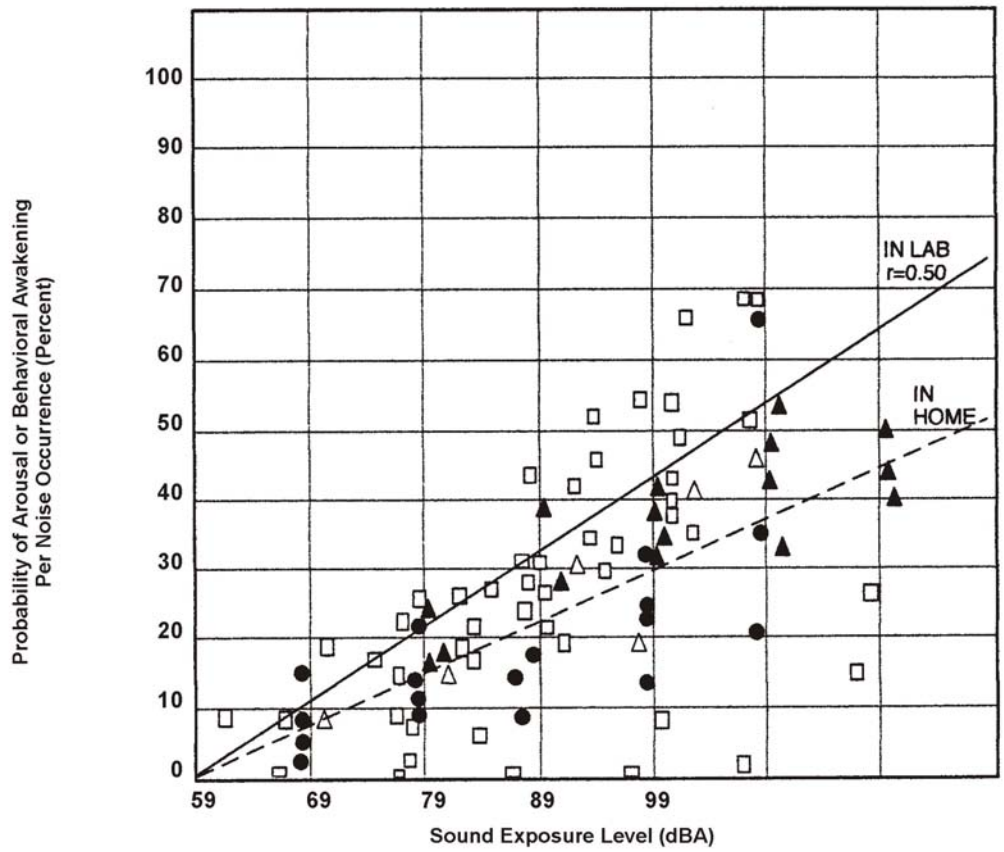

LEGEND

- □ Laboratory Studies, Variety of Noises, Lukas
- ● Steady State (In Home)
- ▲ Transient (In Home)
- △ Truck Noise, Laboratory Study, Thiesen
  Transformer, Transmission Line, Window Air Conditioner, and Distant Traffic Noise, Horonjeff

Figure D-4. Probability of Arousal or Behavioral Awakening in Terms of Sound Exposure Level

Noise-induced structural vibration may also cause annoyance to dwelling occupants because of induced secondary vibrations, or "rattle," of objects within the dwelling, such as hanging pictures, dishes, plaques, and bric-a-brac. Window panes may also vibrate noticeably when exposed to high levels of airborne noise, causing homeowners to fear breakage. In general, such noise-induced vibrations occur at sound levels above those considered normally incompatible with residential land use. Thus, assessments of noise exposure levels for compatible land use should also be protective of noise-induced secondary vibrations.

D.2.8 Noise Effects on Terrain

Members of the public often believe that noise from low-flying aircraft can cause avalanches or landslides by disturbing fragile soil or snow structures in mountainous areas. There are no known instances of such effects, and it is considered improbable that such effects will result from routine, subsonic aircraft operations.

D.2.9 Noise Effects on Historical and Archaeological Sites

Because of the potential for increased fragility of structural components of historical buildings and other historical sites, aircraft noise may affect such sites more severely than newer, modern structures. Again, there are few scientific studies of such effects to provide guidance for their assessment.

One study involved the measurements of sound levels and structural vibration levels in a superbly restored plantation house, originally built in 1795 and now situated approximately 1,500 feet from the centerline at the departure end of Runway 19L at Washington Dulles International Airport. These measurements were made in connection with the proposed scheduled operation of the supersonic Concorde airplane at Dulles (Wesler 1977). There was special concern for the building's windows, since roughly half of the 324 panes were original. No instances of structural damage were found. Interestingly, despite the high levels of noise during Concorde takeoffs, the induced structural vibration levels were actually less than those induced by touring groups and vacuum cleaning within the building itself.

As noted above for the noise effects of noise-induced vibrations on normal structures, assessments of noise exposure levels for normally compatible land uses should also be protective of historic and archaeological sites.

D.3 NOISE MODELING

An aircraft in subsonic flight generally emits noise from two sources: the engines and flow noise around the airframe. Noise generation mechanisms are complex and, in practical models, the noise sources must be based on measured data. The Air Force has developed a series of computer models and aircraft noise databases for this purpose. The models include NOISEMAP (Moulton 1992) for noise around airbases, ROUTEMAP (Lucas and Plotkin 1988) for noise associated with low-level training routes, and MR_NMAP (Lucas and Calamia 1996) for use in MOAs and ranges. These models use the NOISEFILE database developed by the Air Force. NOISEFILE data include SEL and L_{Amax} as a function of speed and power setting for aircraft in straight flight.

Noise from an individual aircraft is a time-varying continuous sound. It is first audible as the aircraft approaches, increases to a maximum when the aircraft is near its closest point, then diminishes as it departs. The noise depends on the speed and power setting of the aircraft and its trajectory. The models noted above divide the trajectory into segments whose noise can be computed from the data in NOISEFILE. The contributions from these segments are summed.

MR_NMAP was used to compute noise levels in the airspace. The primary noise metric computed by MR_NMAP was DNL_{mr} averaged over each airspace. Supporting routines from NOISEMAP were used to calculate SEL and L_{Amax} for various flight altitudes and lateral offsets from a ground receiver position.

D.4 REFERENCES

American National Standards Institute (ANSI). 1980. Sound Level Descriptors for Determination of Compatible Land Use. American National Standards Institute Standard ANSI S3.23-1980.

American National Standards Institute (ANSI). 1988. Quantities and Procedures for Description and Measurement of Environmental Sound, Part 1. American National Standards Institute Standard ANSI S12.9-1988.

Committee of the Health Council of the Netherlands (CHCN). 1996. Effects of Noise on Health. Noise/News International 4. September.

Edmonds, L.D., P.M. Layde, and J.D. Erickson. 1979. *Airport Noise and Teratogenesis*. Archives of Environmental Health, 243-247. July/August.

Federal Interagency Committee on Noise (FICON). 1992. Federal Agency Review of Selected Airport Noise Analysis Issues. Federal Interagency Committee on Noise. August.

Federal Interagency Committee on Urban Noise (FICUN). 1980. Guidelines for Considering Noise in Land-Use Planning and Control. Federal Interagency Committee on Urban Noise. June.

Fidell, S., D.S. Barger, and T.J. Schultz. 1991. Updating a Dosage-Effect Relationship for the Prevalence of Annoyance Due to General Transportation Noise. *J. Acoust. Soc. Am.*, 89, 221-233. January.

Finegold, L.S., C.S. Harris, and H.E. von Gierke. 1994. Community Annoyance and Sleep Disturbance: Updated Criteria for Assessing the Impacts of General Transportation Noise on People. In *Noise Control Engineering Journal*, Volume 42, Number 1. pp. 25-30. January-February.

Frerichs, R.R., B.L. Beeman, and A.H. Coulson. 1980. Los Angeles Airport Noise and Mortality: Faulty Analysis and Public Policy. *Am. J. Public Health*, 357-362. April.

Harris, C.M. (editor). 1979. *Handbook of Noise Control*. McGraw-Hill.

Jones, F.N. and J. Tauscher. 1978. Residence Under an Airport Landing Pattern as a Factor in Teratism. *Archives of Environmental Health*, 10-12. January/February.

Kryter, K.D. 1984. Physiological, Psychological, and Social Effects of Noise. *NASA Reference Publication* 1115, 446. July.

Lucas, M.J. and P.T. Calamia. 1996. Military Operations Area and Range Noise Model: NRNMAP User's Manual. Final. Wright-Patterson AFB, Ohio: AAMRL. A1/OE-MN-1996-0001.

Lucas, M.J. and K. Plotkin. 1988. ROUTEMAP Model for Predicting Noise Exposure From Aircraft Operations on Military Training Routes. Final, Wright-Patterson AFB, Ohio. AAMRL. AAMRL-TR-88-060.

Meecham, W.C. and N. Shaw. 1979. Effects of Jet Noise on Mortality Rates. *British J. Audiology*, 77-80. August.

Moulton, C.L. 1992. Air Force Procedure for Predicting Noise Around Airbases: Noise Exposure Model (NOISEMAP). Technical Report AL-TR-1992-59.

National Research Council/National Academy of Sciences (NRC/NAS). 1977. Guidelines for Preparing Environmental Impact Statements on Noise. Committee on Hearing, Bioacoustics, and Biomechanics.

Ollerhead, J.B., C.J. Jones, R.E. Cadoux, A. Woodley, B.J. Atkinson, J.A. Horne, F. Pankhurst, L. Reyner, K.I. Hume, F. Van, A. Watson, I.D. Diamond, P. Egger, D. Holmes, and J. McKean. 1992. Report of a Field Study of Aircraft Noise and Sleep Disturbance. The Department of Transport, Department of Safety Environment and Engineering. Civil Aviation Authority, London. December.

Pearsons, K.S., D.S. Barber, and B.G. Tabachick. 1989. Analyses of the Predictability of Noise-Induced Sleep Disturbance. USAF Report HSD-TR-89-029. October.

Plotkin, K.J., L.C. Sutherland, and J.A. Molino. 1987. Environmental Noise Assessment for Military Aircraft Training Routes, Volume II: Recommended Noise Metric. Wyle Research Report WR 86-21. January.

Schultz, T.J. 1978. Synthesis of Social Surveys on Noise Annoyance. *J. Acoust. Soc. Am.*, 64, 377-405. August.

Stusnick, E., K.A. Bradley, J.A. Molino, and G. DeMiranda. 1992. The Effect of Onset Rate on Aircraft Noise Annoyance. Volume 2: Rented Own-Home Experiment. Wyle Laboratories Research Report WR 92-3. March.

Stusnick, E., K.A. Bradley, M.A. Bossi, and D.G. Rickert. 1993. The Effect of Onset Rate on Aircraft Noise Annoyance. Volume 3: Hybrid Own-Home Experiment. Wyle Laboratories Research Report WR 93-22. December.

Sutherland, L. 1989. Assessment of Potential Structural Damage from Low Altitude Subsonic Aircraft. Wyle Laboratories Research Report WR 89-16. El Segundo, CA.

U.S. Department of Transportation (USDOT). 1984. Airport Noise Compatibility Planning; Development of Submission of Airport Operator's Noise Exposure Map and Noise Compatibility Program; Final Rule and Request for Comments. 14 CFR Parts 11 and 150, Federal Register 49(244): 18 December.

United States Environmental Protection Agency (USEPA). 1974. Information on Levels of Environmental Noise Requisite to Protect the Public Health and Welfare With an Adequate Margin of Safety. U.S. Environmental Protection Agency Report 550/9-74-004. March.

von Gierke, H.R. 1990. The Noise-Induced Hearing Loss Problem. NIH Consensus Development Conference on Noise and Hearing Loss. Washington, D.C. 22-24 January.

Wesler, J.E. 1977. Concorde Operations At Dulles International Airport. NOISEXPO '77, Chicago, IL. March.

THIS PAGE INTENTIONALLY LEFT BLANK.

E SUPPORTING INFORMATION FOR AIR QUALITY

E.1 AIR QUALITY

This appendix presents an overview of the Clean Air Act (CAA) and the State of Georgia air quality program. The appendix also discusses emission factor development and calculations including assumptions employed in the air quality analyses presented in the Air Quality Section 3.4.

E.2 AIR QUALITY PROGRAM OVERVIEW

In order to protect public health and welfare, the USEPA has developed numerical concentration-based standards or NAAQS for six "criteria" pollutants (based on health related criteria) under the provisions of the Clean Air Act Amendments of 1970. There are two kinds of NAAQS: Primary and Secondary standards. Primary standards prescribe the maximum permissible concentration in the ambient air to protect public health including the health of "sensitive" populations such as asthmatics, children, and the elderly. Secondary standards prescribe the maximum concentration or level of air quality required to protect public welfare including protection against decreased visibility, damage to animals, crops, vegetation, and buildings (Government Printing Office, no date).

The CAA gives states the authority to establish air quality rules and regulations. These rules and regulations must be equivalent to, or more stringent than, the Federal program. Moody AFB is under the jurisdiction of the Georgia Department of Environmental Protection.

Georgia has adopted the primary and secondary federal ambient air quality standards which are presented in Table E-1.

Based on measured ambient air pollutant concentrations, the USEPA designates areas of the United States as having air quality better than (attainment), worse than (nonattainment) the NAAQS, and unclassifiable. Those that cannot be classified on the basis of available information as meeting or not meeting the NAAQS for a particular pollutant are "unclassifiable" and are treated as attainment until proven otherwise. Attainment areas can be further classified as "maintenance" areas. These "attainment" maintenance areas are those areas previously classified as nonattainment that have successfully reduced air pollutant concentrations below the standard. Maintenance areas are under special guidance plans and must operate under some of the nonattainment area plans to ensure compliance with the NAAQS. Lowndes County is a Federal attainment area.

Table E-1. Summary of National and State Ambient Air Quality Standards

Pollutant	*Averaging Time*	Federal Standards			
		Primary		Secondary	
		ppm[1, 2, 3, 4]	*ug/m³* [5]	*Ppm* [4]	*ug/m³* [5]
Ozone (O3)	1 Hour	0.12	235 [6]	Same as Primary Standard	
	8 Hour	0.08	157 [7]		
Particulate Matter (PM10)	24 Hour	--	150 [8]	Same as Primary Standard	
	Annual Arithmetic Mean	--	50		
Fine Particulate Matter (PM2.5)	24 Hour	--	65 [9]	Same as Primary Standard	
	Annual Arithmetic Mean	--	15		
Carbon Monoxide (CO)	8 Hour	9	10	None	
	1 Hour	35	40		
Nitrogen Dioxide (NO2)	Annual Arithmetic Mean	0.05	100	Same as Primary Standard	
	1 Hour	--	--		
Sulfur Dioxide (SO2)	Annual Arithmetic Mean	0.03	80	--	--
	24 Hour	0.14	365	--	
	3 Hour	--	--	0.5	1300
	1 Hour	--	--		
Lead	30 Day Average	--	--	Same as Primary Standard	
	Calendar Quarter	--	1.5		

1. National standards (other than ozone, particulate matter, and those based on annual averages or annual arithmetic mean) are not to be exceeded more than once a year.
2. Concentration expressed in equivalent units based upon a reference temperature of 25°C and a reference pressure of 760 mm of mercury; ppm refers to parts per million by volume.
3. National Primary Standards: The levels of air quality necessary, with an adequate margin of safety to protect the public health.
4. ppm = parts per million
5. µg/m3 = micrograms per cubic meter
6. The ozone one-hour standard still applies to areas that were designated nonattainment when the ozone eight-hour standard was adopted in July 1997. The 1-hour ozone standard is attained when the expected
7. The 8-hour ozone standard is attained when the 3-year average of the annual fourth-highest daily maximum 8-hour average is not greater than 0.08 ppm.number of days per calendar year with maximum hourly average concentrations above the standard is equal to or less than 1 averaged over a three-year period.
8. The PM_{10} 24-hour standard is attained when 99 percent of the daily concentrations, averaged over three years, are equal to or less than the standard.
9. The $PM_{2.5}$ 24-hour standard is attained when 98 percent of the daily concentrations, averaged over three years, are equal to or less than the standard.

Each state is required to develop a state implementation plan (SIP) that sets forth how CAA provisions will be imposed within the state. The SIP is the primary means for the implementation, maintenance, and enforcement of the measures needed to attain and maintain the NAAQS within each state and includes control measures, emissions limitations, and other provisions required to attain and maintain the ambient air quality standards. The purpose of the SIP is twofold. First, it must provide a control strategy that will result in the attainment and maintenance of the NAAQS. Second, it must demonstrate that progress is being made in attaining the standards in each nonattainment area.

In attainment areas, major new or modified stationary sources of air emissions on and in the area are subject to Prevention of Significant Deterioration (PSD) review to ensure that these sources are constructed without causing significant adverse deterioration of the clean air in the area. A major new source is defined as one that has the potential to emit any pollutant regulated under the CAA in amounts equal to or exceeding specific major source thresholds: 100 or 250 tons/year based on the source's industrial category. A major modification is a physical change or change in the method of operation at an existing major source that causes a significant "net emissions increase" at that source of any regulated pollutant. Table E-2 provides a tabular listing of the PSD significant emissions rate (SER) thresholds for selected criteria pollutants (USEPA 1990). However it should be noted these efforts are associated with construction and mobile source emissions PSD does not apply.

Table E-2. Criteria Pollutant Significant Emissions Rate Increases Under PSD Regulations

Pollutant	*Significant Emissions Rate (tons/year)*
PM_{10}	15
Total Suspended Particulate (TSP)	25
SO2	
NOx	40
Ozone (VOC)	40
CO	100

Source: Title 40 CFR Part 50

Georgia measures levels of air pollutants throughout the state via the Ambient Monitoring Program (AMP). The data are used to determine compliance with air standards established for the five criteria pollutants (carbon monoxide, lead, nitrogen dioxide, ozone, particulate matter, and sulfur dioxide) and to evaluate the need for any special controls for various other pollutants (GDNR EPD, 2006). The monitors tend to be concentrated in areas with the largest population densities. Not all pollutants are monitored in all areas. The air quality monitoring network is used to identify areas where the ambient air quality standards are being violated and plans are needed to reduce pollutant concentration levels to be in attainment with the standards, also included are areas where the ambient standards are being met but plans are necessary to ensure maintenance of acceptable levels of air quality in the face of anticipated population or industrial growth.

E.2.1 Regulatory Comparisons

In order to evaluate the air emissions and their impact to the overall region of influence (ROI). The emissions associated with the construction activities were compared to the total emissions on a pollutant-by-pollutant basis for the ROI's 2002 NEI data. Potential impacts to air quality are then identified as the total emissions of any pollutant that equals 10 percent or more of the ROI's emissions for that specific pollutant. The 10 percent criteria approach is used in the General Conformity Rule as an indicator for impact analysis for non-attainment and maintenance areas and although SW Georgia AQCR is attainment for the NAAQS, the General Conformity Rule's impact analysis was utilized to provide a consistent approach to evaluating the impact of the proposed actions emissions.

To provide a conservative evaluation, the impacts screening in this analysis, used a more restrictive criteria than required in the General Conformity Rule. Rather than comparing emissions from construction activities to regional inventories (as required in the General Conformity Rule), emissions were compared to the individual parish potentially impacted, which is a smaller area.

E.3 PROJECT CALCULATIONS

E.3.1 Construction Emissions

Construction emissions calculations were completed using the calculation methodologies described in the U.S. Air Force Air Conformity Applicability Model (ACAM). As previously indicated, a conformity determination is not required since Lowndes County is designated "attainment", the ACAM was used to provide a level of consistency with respect to emissions factors and calculations.

The ACAM evaluates the individual emissions from different sources associated with the construction phases. These sources include grading activities, asphalt paving, construction worker trips, stationary equipment (e.g. saws and generators), non-residental architectural coatings and mobile equipment emissions *(USAF ACAM Technical Document).*

As a result of limited construction information, certain assumptions were made to develop the air quality analysis. It was assumed that 40 construction, renovation, and infrastructure projects would be initiated on Moody AFB totaling approximately 10 acres or 469,296 square feet of construction. Twenty-five percent of the ten acres would be paved or two and a half acres. Each building was input as the specified square feet listed in the Description of Proposed Action and Alternatives in size and there would be a distance less than tenth of an acre between each building. Based on these assumptions, the construction emissions were calculated using the calculation methodology expressed below.

E.3.2 Grading Activities

Grading activities are divided into grading equipment emissions and grading operation emissions. Grading equipment calculations are combustive emissions from equipment engines and are ascertained in the following manner:

VOC = .22 (lbs/acre/day) * Acres * DPY_1 / 2000
NOx = 2.07 (lbs/acre/day) * Acres * DPY_1 / 2000
PM_{10} = .17 (lbs/acre/day) * Acres * DPY_1 / 2000
CO = .55 (lbs/acre/day) * Acres * DPY_1 / 2000
SO2 = .21 (lbs/acre/day) * Acres * DPY_1 / 2000

Where Acres = number of gross acres to be graded during Phase I construction.

DPY_1 = number of days per year during Phase I construction which are used for grading

2000 = conversion factor from pounds to tons

All emissions are represented as tons per year.

Grading operations are calculated using a similar equation from the Sacramento Air Quality Management District and the South Coast Air Quality Management Districts *(Air Quality Thresholds of Significance and CEQA Air Quality Handbook)*. These calculations include grading and truck hauling emissions.

PM10 (tons/yr) =60.7 (lbs/acre/day) * Acres * DPY_1 / 2000

Where Acres = number of gross acres to be graded during Phase1 construction.

DPY_1 = number of days per year during Phase I construction which are used for grading

2000 = conversion factor from pounds to tons

Calculations used in the EA assumed that there were no controls used to reduce fugitive emissions. Also, it was assumed that construction activities would occur within 365 days and grading activities would represent 16% of that total. Therefore, 60 days was the duration established for grading operations. Also, it was assumed that for each building constructed a tenth of an acre of grading would be required for each construction activity. Emissions factors were derived from the Sacramento Air Quality Management District and the South Coast Air Quality Management District *(Air Quality Thresholds of Significance and CEQA Air Quality Handbook)*.

E.3.3 Architectural Coatings

Non-residential architectural coating emissions are released through the evaporation of solvents that are contained in paints, varnishes, primers and other surface coatings.

VOC_{SF} (lbs/yr) = (SQR_GRSQF * 1.63)/2000

Where: SQR_GRSQF = square root of gross square feet of non-residential building space to be constructed in the given year of construction.

1.63 = Emissions factor

2000 = conversion factor from pounds to tons

It was assumed that construction activities would occur within 365 days. After subtracting the grading activities from the estimated overall construction time, the actual construction period was reduced to 335 days. Additionally, it was assumed that thirty-three buildings were constructed over the two year life of the project at the specified square footage. Emissions factors were derived from the Sacramento Air Quality Management District and the South Coast Air Quality Management District *(Air Quality Thresholds of Significance and CEQA Air Quality Handbook)*.

E.3.4 Asphalt Paving

VOC emissions are released during asphalt paving and are calculated using the following methodology:

VOC_{PT} (tons/yr) = (2.62 lbs/acre) * Acres Paved / 2000
Acres Paved = total number of acres to be paved at the site.
2000 = conversion factor from pounds to tons

It was assumed that a minimum of 25% of the overall area (2.6 acres) to be developed for the beddown of the A/OA-10 would be paved with asphalt. The specific emissions factors used in the calculations were available through Sacramento Air Quality Management and the South Coast Air Quality Management Districts *(Air Quality Thresholds of Significance and CEQA Air Quality Handbook)*.

E.3.5 Construction Worker Trips

Construction worker trips during the construction phases of the project are calculated and represent a function of the number of residential units to be constructed and/or square feet of commerical construction.

Trips (trips/day) = .42 (trip/unit/day) * Area of training facilities
Total daily trips are the applied to the following factors depending on the corresponding years.
Year 2005 through 2009:
VOC_E = .016 * Trips
NOx_E = .015 * Trips
$PM10_E$ = .0022 * Trips
CO_E = .262 * Trips
Year 2010 and beyond:
VOC_E = .012 * Trips
NOx_E = .013 * Trips
$PM10_E$ = .0022 * Trips
CO_E = .262 * Trips

To convert from pounds per day to tons per year:

VOC (tons/yr) = VOC_E * DPY_{II}/2000
NOx (tons/yr) = NOxE * DPYII/2000
PM10(tons/yr) = $PM10_E$ * DPY_{II}/2000
CO (tons/yr) = CO_E * DPY_{II}/2000

Where: Commercial construction = total square footage of construction projects be constructed in the given year of construction.

2000 = conversion factor from pounds to tons
DPY_{II} = number of days per year during Phase II construction activities.

It was assumed that the total square footage of construction was estimated to be 456,292 square feet which is based on thirty-three buildings at various square footage amounts. Emissions factors were derived from the Sacramento Air Quality Management District and the South Coast Air Quality Management District *(Air Quality Thresholds of Significance and CEQA Air Quality Handbook)*.

E.3.6 Stationary Equipment:

Emissions from stationary equipment occur when gasoline powered equipment (e.g. saws, generators, etc.) is used at the construction site.

VOC = .198 * (GRSQFT) * DPY_{II}/ 2000
NOx = .137 * (GRSQFT) * DPYII/ 2000
PM10 = .004 * (GRSQFT) * DPYII/ 2000
CO = 5.29 * (GRSQFT) * DPY_{II}/ 2000
SO2 = .007 * (GRSQFT) * DPY_{II}/ 2000

Where GRSQF = Gross square feet of commercial buildings to be constructed during phase II

DPY_{II} = number of days per year during Phase II construction

2000 = conversion factor from pounds to tons

It was assumed that the total square footage of construction was estimated to be 456,292 square feet which is based on thirty-three buildings at various square footage amounts. Emissions factors were derived from the Sacramento Air Quality Management District and the South Coast Air Quality Management District *(Air Quality Thresholds of Significance and CEQA Air Quality Handbook)*.

E.3.7 Mobile Equipment:

Mobile equipment emissions include pollutant releases associated with forklifts, dump trucks, etc. used during Phase II construction.

VOC = .17 * (GRSQFT) * DPY_{II}/ 2000
NOx = 1.86 * (GRSQFT) * DPYII/ 2000

PM10 = .15 * (GRSQFT) * DPYII/ 2000
CO = .78 * (GRSQFT) * DPY_{II}/ 2000
SO2 = .23 * (GRSQFT) * DPY_{II}/ 2000

Where: GRSQF = Gross square feet of training area to be constructed during Phase II

DPY_{II} = number of days per year during Phase II construction

2000 = conversion factor from pounds to tons

It was assumed that the total square footage of construction was estimated to be 456,292 square feet which is based on thirty-three buildings at various square footage amounts. Emissions factors were derived from the Sacramento Air Quality Management District and the South Coast Air Quality Management District *(Air Quality Thresholds of Significance and CEQA Air Quality Handbook)*.

E.3.8 Aircraft Emissions

As a result of limited information, certain assumptions were made to develop the air quality analysis. Baseline aircraft emissions were calculated using the current based aircraft and operation tempo, which includes 9 HC-130, 14 HH-60, 68 T-38C, and 45 T-6A. The proposed action analysis included the HC-130's and HH-60 plus the addition of 48 A/OA-10. The current and expected operation tempo is outlined in Table E-3.

Table E-3. Current Baseline and Proposed Action Annual Sortie Activity

	Sorties/year	
Aircraft	***Current Conditions***	***Proposed Action***
A/OA-10	0	15,800
HC-130	1,994	1,994
HH-60	1,906	1,906
T-38C	15,000	0
T-6A	22,000	0
Total	**40,900**	**19,700**

E.3.9 Aircraft Flying Operations

Aircraft operations of concern are those that occur from ground level up to 3,000 feet above ground level (AGL). The 3,000-foot AGL ceiling was assumed as the atmospheric mixing height above which any pollutant generated would not contribute to increased pollutant concentrations at ground level. The aircraft operation of interest within the mixing zone is the landing and takeoff (LTO) cycle. The LTO is characterized by five modes of operation: approach, taxi in, taxi out, takeoff, and climb out.

As previously stated, the LTO cycle is the basis for calculating pollutant emissions. For each mode of operation during an LTO cycle, an aircraft engine operates at a specified power setting and for a specific period (time-in-mode). The pollutant emission rate is a function of the engine's operating mode, the fuel flow rate, and the engine's overall efficiency. Emissions for one complete

LTO cycle for a particular aircraft are calculated by knowing the specific engine pollutant emission factors for each mode of operation.

The US Air Force has developed emissions factors for aircraft engines and Table E-4 presents an example of the emission factors and aircraft engine performance data for each of the aircraft type used in this analysis. The table lists the various engine modes, time in each mode, fuel flow, and corresponding pollutant emission factors. Using these data, as well as information on activity levels (i.e., number of sorties/LTO operations), pollutant emissions for each aircraft were calculated by applying Equation 1.

Emissions = A*TIM*FF*EF*ENG*CF **(Equation 1)**

Where:

Emissions = Aircraft Emissions (lbs) (for EF in lb/1000 gal fuel)

A = Activity (number of operations (i.e., sorties/TGOs) at a specified power setting per month)

TIM = Time-in-mode at a specified power setting (hr/operation)

FF = Fuel flow at a specified power setting (gal/hr/engine)

EF = Emission factor for specific engine type and power setting (lb/1000 gallons of fuel used)

ENG = Number of engines on aircraft

CF = Conversion Factor (0.001)

As the equation indicates, emissions were estimated by first calculating total fuel used in each of the different modes (based on the total number of LTOs or TGOs) with the appropriate emission factor. Total aircraft emissions were calculated by multiplying the resulting quantity times the number of engines on the aircraft.

Aircraft flying operations were calculated in ACAM using LTO cycles. As previously described, emissions from engine exhaust occur for each operation during idle/taxi-out, takeoff, climb out, approach, and taxi/idle-in. Only those portions of the flying operation that take place below the atmospheric mixing height are considered (these are the only emissions presumed to affect ground level concentrations).

Table E-4. Aircraft Performance Data and Emission Factors

Aircraft	Aircraft Engine	Power Setting	Fuel Flowrate (lb/hr)	Emission Factors in lb pollutant per 1000 lb fuel burned (lb/1000lb)			
				NOx	CO	VOC	PM10
A/OA-10	TF34-GE-100-100A	Idle	449	1.35	86.68	20.7	8
		Approach	773	4.02	25.65	1.49	6.19
		Intermediate	1,516	6.42	6.28	0.65	8.93
		Military	3,026	8.83	4	0.4	2.67
HC-130	T56-A-15	Ground Idle	900	7.49	3.84	1.97	3.64
		Flight Idle	1,240	8.31	2.82	0.58	3.85
		Normal RTD	2,180	9.69	1.65	0.42	1.46
		Int Mil	2,456	11.42	1.77	0.28	1.22
HH-60	T700-GE-700	Ground Idle	133	2.78	53.18	56.67	1.48
		Flight Idle	500	7.56	5.25	0.37	1.26
		Flight Max	589	8.18	3.75	0.49	2.22
		Overspeed	706	8.61	3.09	0.39	2.6
T-38C	J85-GE-5H	Idle	506	2.11	158.22	15.34	4.7
		Approach	1,071	2.86	93.67	3.04	1.79
		Intermediate	2,155	5.67	28.38	0.64	1.13
		Military	2,815	4.66	28.98	0.52	1.13
		AB	8,138	2.09	14.19	2.29	0.25
T-6A	PT6A-68	Idle	191	2.7	73.4	25.2	No Data
		Approach	334	4.4	23.7	4.2	No Data
		Intermediate	587	6.4	6.9	0.3	No Data
		Military	651	8.8	5.2	0.2	No Data

Source: U.S. Air Force, 2002

E.3.10 Emission Calculation

$Ep = N * F * OPS * NUMEG * (\Sigma TIMi * EFi,p)/2000)$

Where:

N = Number of aircraft

F = Fraction of the year the aircraft operate

OPS = The number of operations (total LTOs and T/Gs) per year for each aircraft in the proposed action unit

TIMi = Time-in-mode for aircraft operating mode, i, hours. The engine operating mode used in the emissions factors is correlated to the aircraft operating mode as follows:

Aircraft Mode	Engine Mode
Taxi/ldle-out	Idle (ID)
Takeoff	Military (MI) or afterburner (AB)
Climbout	Intermediate
Approach	Approach (AP)
Taxi/ldle-in	ID

M = Number of aircraft operating modes (five for LTOs; three for T/Gs).
NUMENG = The number of engines for the aircraft type.
EFi,p = Emission factor for pollutant, p, for each engine operating mode, i, lb/hr.
2000 = Conversion from pounds to tons.

It was assumed that of the seventy-five flights per day that there were 37.5 LTO cycles and that the LTO's were evenly divided between the T-1A and T-6A. The operating modes used in ACAM for each aircraft is provided in Tables E-5 through E-8 below:

Table E-5. Operating Modes for HH-60G

Operating Modes	*Minutes*
Taxi/Idle Out	8.0
Take off	0.0
Climb	6.8
Approach	6.8
Taxi/Idle In	7.0

Table E-6. Operating Modes for C-130H

Operating Modes	*Minutes*
Taxi/Idle Out	9.2
Take off	0.4
Climb	1.2
Approach	5.1
Taxi/Idle In	6.7

Table E-7. Operating Modes for T-6A

Operating Modes	*Minutes*
Taxi/Idle Out	9
Take off	.6
Climb	1.2
Approach	5.4
Taxi/Idle In	6.6

Table E-8 Operating Modes for T-38

Operating Modes	*Minutes*
Taxi/Idle Out	12.8
Take off	0.4
Climb	0.9
Approach	3.8
Taxi/Idle In	6.4

Reference: US Air Force, 2002a

E.3.11 Aircraft Ground Operations (Trim Tests)

Trim tests are engine tests performed with the engines on the aircraft. All engines on the aircraft are assumed to be tested the same number of times each year.

Emission Calculation:

$Ep = N * F * TRIMS * NUMEG * (\Sigma TIMi * EFi,p)/2000)$

Where:

N = Number of aircraft

F = Fraction of the year the aircraft operate.

TRIMS = The number of engine trim tests per year for each engine.

TIMj = Time-in-mode for operating mode, i, hours. This refers to the engine operating mode.

M = Number of engine operating modes.

NUMENG = The number of engines for the aircraft type

EFi,p = Emission factor for pollutant, p, for operating mode, i lb./hr. Particulate matter (PM) is conservatively assumed to be 100 percent PM10.

2000 = Conversion from pounds to tons.

It was assumed that there would be 365 trim tests performed annually with each aircraft. The power setting inputs for the trim tests emissions calculations used in ACAM are provided in Tables E-9 through E-13 below for each air craft.

Table E-9. Trim Test Power Settings for A/OA-10

Operating Modes	*Minutes*
Idle	5
Approach	11.2
Intermediate	3.8
Military	5
Afterburn	N/A

Table E-10. Trim Test Power Settings for T-6A

Operating Modes	*Minutes*
Idle	5
Approach	11.2
Intermediate	3.8
Military	5
Afterburn	NA

Table E-11. Trim Test Power Settings for HC-130

Operating Modes	*Minutes*
Idle	9
Approach	20.2
Intermediate	6.8
Military	9
Afterburn	N/A

Table E-12. Trim Test Power Settings for HH-60

Operating Modes	*Minutes*
Idle	5
Approach	11.2
Intermediate	N/A
Military	5
Afterburn	3.8

Table E-13. Trim Test Power Settings for T-38C

Operating Modes	*Minutes*
Idle	3
Approach	6.8
Intermediate	2.2
Military	2.2
Afterburn	0.8

Source: US Air Force, 2002a

E.3.12 Aerospace Ground Equipment(AGE) and Auxiliary Power Units

AGE includes such aircraft support equipment as air compressors, air conditioner, aircraft tug narrows, cargo loaders, baggage tugs, deicers, fuel trucks, generators, ground heaters, hydraulic test stands, jacking manifolds and miscellaneous other equipment. APU includes onboard equipment that provides power to the aircraft while it is on the ground and sometimes through takeoff and climb out.

Emissions are calculated using the number of landing/takeoff (LTO) cycles for one aircraft type chosen for the proposed action and for this EA the training activities were chosen as the proposed action for ACAM. Annual emissions are obtained for each aircraft chosen and the associated AGE and APU equipment for that aircraft using the following process. The number of LTO cycles for one aircraft per aircraft type chosen is multiplied by the total number of aircraft per aircraft type, the AGE/APU equipment operating time (hours) per LTO cycle, the published emissions factor, and the load factor as well as the rated horsepower.

AGE and APU Emissions Calculations:

Ep (tons/yr) = N * OT * LTO * LF/100 * EF * (1/2000)
N = Total number of aircraft per air craft type
LTO = Number of LTO cycles per aircraft per year
OT = AGE and APU equipment usage rate in annual average hours per
ACAM default values were used for AGE and APU calculations.

References: USEPA, 1989; U.S. Air Force 1996; US Air Force, 2002a and 2002b

E.3.13 National Emissions Inventory

The National Emissions Inventory (NEI) is operated under EPA's Emission Factor and Inventory Group, which prepares the national database of air emissions information with input from numerous State and local air agencies, from tribes, as well as from industry. The database contains information on stationary and mobile sources that emit criteria air pollutants and hazardous air pollutants (HAPs). The database includes estimates of annual emissions, by source, of air pollutants in each area of the country, on an annual basis. The NEI includes emission estimates for all 50 States, the District of Columbia, Puerto Rico, and the Virgin Islands. Emission estimates for individual point or major sources (facilities), as well as county level estimates for area, mobile and other sources, are available currently for years 1996 and1999 for criteria pollutants, and HAPs.

Criteria air pollutants are those for which EPA has set health-based standards. Four of the six criteria pollutants are included in the NEI database:

Carbon Monoxide (CO)
Nitrogen Oxides (NOx)
Sulfur Dioxide (SO2)
Particulate Matter (PM10 and PM2.5)

The NEI also includes emissions of Volatile Organic Compounds (VOCs), which are ozone precursors, emitted from motor vehicle fuel distribution and chemical manufacturing, as well as other solvent uses. VOCs react with nitrogen oxides in the atmosphere to form ozone. The NEI database defines three classes of criteria air pollutant sources:

- Point sources - stationary sources of emissions, such as an electric power plant, that can be identified by name and location. A "major" source emits a threshold amount (or more) of at least one criteria pollutant, and must be inventoried and reported. Many states also inventory and report stationary sources that emit amounts below the thresholds for each pollutant.
- Area sources - small point sources such as a home or office building, or a diffuse stationary source, such as wildfires or agricultural tilling. These sources do not individually produce sufficient emissions to qualify as point sources. Dry cleaners are one example, i.e., a single dry cleaner within an inventory area typically will not qualify as a point source, but collectively the emissions from all of the dry cleaning facilities in the inventory area may be significant and therefore must be included in the inventory.
- Mobile sources - any kind of vehicle or equipment with a gasoline or diesel engine; airplane; or ship.

The main sources of criteria pollutant emissions data for the NEI are:

- For electric generating units - EPA's Emission Tracking System / Continuous Emissions Monitoring Data (ETS/CEM) and Department of Energy fuel use data.
- For other large stationary sources - state data and older inventories where state data was not submitted.
- For on-road mobile sources - the Federal Highway Administration's (FHWA's) estimate of vehicle miles traveled and emission factors from EPA's MOBILE Model.
- For non-road mobile sources - EPA's NONROAD Model.
- For stationary area sources - state data, EPA-developed estimates for some sources, and older inventories where state or EPA data was not submitted.
- State and local environmental agencies supply most of the point source data. EPA's Clean Air Market program supplies emissions data for electric power plants.

E.4 ACRONYMS

CAA	Clean Air Act
NAAQS	National Ambient Air Quality Standards
NEI	National Emissions Inventory
ppm	parts per million
PSD	Prevention of Significant Deterioration
SER	Significant Emissions Rate
SIP	State Implementation Plan
USEPA	U.S. Environmental Protection Agency

E.5 REFERENCES

Code of Federal Regulations, Code of Federal Regulations, Title 40, Part 50 (40 CFR 50), http://www.access.gpo.gov/nara/cfr/cfr-retrieve.html.

GDNR EPD, 2006. *Georgia Department of Natural Resources, Environmental Protection Division, Air Protection Branch.* Ambient Monitoring Program, Susan Zimmer-Dauphinee. http://www.air.dnr.state.ga.us/amp/ June 2006

Government Printing Office, no date. Code of Federal Regulations, Code of Federal Regulations, Title 40, Part 50 (40 CFR 50), www.access.gpo.gov/nara/cfr/cfr-retrieve.html#page1

U.S. Air Force, 2004. Mobile Source Emission Inventory. for Eglin AFB, FL 30 April 2004, Pages 5, 7, 12, and 14

USEPA, 1990. Draft New Source Review Workshop Manual: Prevention of Significant Deterioration and Nonattainment Permitting, Office of Air Quality Planning and Standards, October.

USEPA, 2004. *Green Book: Particulate Matter Nonattainment State/Area/County.* http://www.epa.gov/air/aoqps/greenbk/pncs.html., November 29, 2004., Accessed 17 March 2005

U.S. Air Force, 2003, *U.S. Air Force Air Conformity Applicability Model Technical Documentation*, Air Force Center for Environmental Excellence, May.

U. S. Environmental Protection Agency, 2002. *2002 National Emissions Inventory Database*; Office of Air Quality Planning and Standards, Technology Transfer Network, Clearing House for Inventories and Emissions Factors, www.epa.gov/ttn/chief/net/2002inventory.html. May 2006.

F.1 CONSTRUCTION AND DEMOLITION DEBRIS FROM PROPOSED ACTION

PROJECTS	Square Meters	Square Feet	Quantity of C&D Generated* FY06 (lb)	FY07 (lb)	FY08 (lb)	FY09 (lb)
MILCON PROJECTS						
Weapons Release Shop	1,543	16,603		59,770		
Fuel Cell Hanger, 2 Bay	2,404	25,867		93,121		
A-10 Engine Trim Pad	3,200	34,432		123,955		
Dormitory – 140 PN	4,752	51,132			184,073	
LOLA/Ramp/Gun Berm	5,600	60,256				216,922
Child Development Center	1,257	13,525				48,691
Add/alter Dental Clinic	186	2,001				7,205
Transient Lodging Facility	432	4,648				16,734
Visiting Quarters	906	9,749				35,095
Community Activity Center	1,180	12,697				45,708
TF-34 Engine Shop (CIRF)	2,788	29,999				107,996
Subtotal (lb)	**24,248**	**260,908**	**-**	**276,846**	**184,073**	**478,351**
O&M PROJECTS						
Convert A-10 Munitions Inspection Facility, B1107	221	2,378	8,561			
Convert A-10 Munitions Ops Facility, B1122	125	1,345	4,842			
Convert A-10 Precision Guided Munitions, B1108	562	6,047	21,770			
Construct Munitions Gov Vehicle Yard	1,394	14,999	53,998			
Construct Holding Area Munitions, B1725	-	-	-			
Construct Chapel Annex Addition, B110	165	1,775	6,391			
Construct Recreation Center, B583	307	3,303	11,892			
Construct Range Storage Facility	522	5,617	20,220			
Construct Range Maintenance Facility	186	2,001	7,205			
Convert A-10 Fuels Maintenance Hanger, B788	-	-	-			
Construct Wing Tank Storage	4,089	43,998	158,392			
Flight Kitchen, B796	371	3,992	14,371			
Convert A-10 WLT and MX Hanger, B701	-	-	-			
Convert A-10 Field Training Detachment, B585	186	2,001	7,205			

PROJECTS	Square Meters	Square Feet	Quantity of C&D Generated* FY06 (lb)	FY07 (lb)	FY08 (lb)	FY09 (lb)
Convert A-10 Fab/structure Shop, B758	186	2,001	7,205			
Construct Weapons Vault Addition, B636	65	699	2,518			
Construct Mobility Bag Mezzanine, B647	147	1,582	5,694			
Construct Maintenance Trailer, B1105	279	3,002	10,807			
Convert A-10 Aircraft Maintenance Unit, B772	-	-		-		
Convert A-10 AMU, B770	892	9,598		34,553		
Convert A-10 Avionics Maintenance Facility, B771	743	7,995		28,781		
Convert A-10 Group Life Support, B798	343	3,691		13,286		
Convert A-10 Pilot Conditioning Facility, B707	251	2,701		9,723		
Convert A-10 HQ Group/OSS, B792	2,045	22,004		79,215		
Convert A-10 Flight Sqn #1 and #2 Ops, B704	2,045	22,004		79,215		
Convert A-10 Flight Simulator, B590	1,255	13,504		48,614		
Restripe A-10 Parking Ramp	-	-		-		
Convert A-10 Hush House, B4128	-	-		-		
Convert A-10 ECM Pod Storage, B711	936	10,071		36,257		
Subtotal (lb)	**17,315**	**186,310**	**353,070**	**329,643**	**-**	**-**
TOTAL	**41,563**	**447,218**	**353,070**	**606,490**	**184,073**	**478,351**
		TOTAL (TONS)	**176.5**	**303.2**	**92.0**	**239.2**
						811
C&D debris from renovation	3.3	lb/ft2				
C&D debris from non-residential new construction	3.9	lb/ft2				
***Average**	**3.6**	**lb/ft2**				

Source: Characterization of Building-related Construction and Demolition Debris in the United States, USEPA, 1998

F.2 MUNITIONS-RELATED DEBRIS FROM PROPOSED ACTION

Table F.2-1. TRI-DDS Munitions Used in the Analyses

Munition Item	*Quantity*	*TRI-DDS Munition Used in Analysis**	*DODIC*	*NSN*
Grand Bay-Historical				
BDU-33	10,716	BOMB BDU-33, CXU-3A/B SIGNAL CTG	E9AA	NA
7.62MM	268,800	CTG 7.62MM 4 BALL	A131	1305001598593
20MM	19,230	CTG 20MM TP M55A2	A889	1305009351944
Grand Bay-Proposed				
BDU-33	15,616	BOMB PRACTICE BDU-33, CXU-3A/B CTG	E9AA	NA
7.62MM	268,800	CTG 7.62MM 4 BALL	A131	1305001598593
20MM	19,230	CTG 20MM TP M55A2	A889	1305009351944
30MM	354,000	CTG 30MM TP M788	B118	1305012687274
2.75IN ROCKET	696	ROCKET 2.75IN PRACTICE WHD INERT WTU-18	H663	NA
2.75IN WP ROCKET	234	ROCKET 2.75IN SMK WP W/WHD	H519	1340001437107
MK-82/GBU-12	86	BOMB PRACTICE MK82 INERT	F243	NA
BDU-50/BDU-56	270	BOMB PRACTICE MK82/BDU-50, CXU-3A/B CTG	E9AM	NA
Townsend- Historical				
BDU-33	19,785	BOMB BDU-33, CXU-3A/B SIGNAL CTG	E9AA	NA
20MM	253,800	CTG 20MM TP M55A2	A889	1305009351944
30MM	12,500	CTG 30MM TP M788	B118	1305012687274
2.75IN ROCKET	450	ROCKET 2.75IN PRACTICE WHD INERT WTU-18	H663	NA
Townsend-Proposed				
BDU-33	21,885	BOMB BDU-33, CXU-3A/B SIGNAL CTG	E9AA	NA
20MM	253,800	CTG 20MM TP M55A2	A889	1305009351944
30MM	62,500	CTG 30MM TP M788	B118	1305012687274
2.75IN ROCKET	450	ROCKET 2.75IN PRACTICE WHD INERT WTU-18	H663	NA

NSN-National Stock Number; DODIC-Department of Defense Identification Code; WP-White Phosphorous; TP-Target/Practice; CTG-Cartridge; WHD-Warhead; SMK-Smoke; NA-Not Available

Table F.2-2. Munitions Debris Generated at Grand Bay Range (lbs)*

Chemical	*Historical (lbs)*	*Proposed Action (lbs)*
Aluminum (fume or dust)	2	2
Antimony	71	74
Barium compounds	11	51
Chromium		4
Copper	1,771	12,171
Lead	3,923	4,135
Manganese		1
Total (lb)	**5,777**	**16,438**

* Source TRI-DDS 2001 v3.1.1

Table F.2-3. Munitions Debris Generated at Townsend Range (lbs)*

Chemical	*Historical (lbs)*	*Proposed Action (lbs)*
Barium compounds	44	49
Chromium	2	2
Copper	5,111	6,561
Lead	68.5	95.4
Total (lb)	**5,225**	**6,708**

* Source TRI-DDS 2001 v3.1.1